MAHARASHTRA JEEVAN PRADHIKARAN

SCHEDULE OF RATES

FOR THE YEAR - 2019-2020

AMRAVATI REGION

(Effective from 1st June 2019)

APPLICABLE FOR AMRAVATI REGION
MAHARASHTRA JEEVAN PRADHIKARAN

Chief Engineer
Maharashtra Jeevan Pradhikaran Region
Amravati

MAHARASHTRA JEEVAN PRADHIKARAN

AMRAVATI REGION

SCHEDULE OF RATES

FOR THE YEAR - 2019-2020

INDEX

Section	Name of Section	Page Nos.	
		From	To
GN	General Notes	1	4
Ann	Annexture I & II - Hilly Areas	5	12
A	Materials	13	14
B	Labour and Machinery	15	16
C	Transportation & Standard weights of pipes	17	32
D	Cement Consumption	33	34
E	Excavation	35	39
F	Iron & Structural Steel Work	40	41
G	Plain Cement Concrete and Reinforced Cement Concrete	42	49
H	Misellaneous	50	59
I	Pipes and Specials		
I	C.I. / D.I.Pipes	60	69
II	P.V.C. Pipes	70	77
III	G.I. Pipes	78	80
IV	D.I Specials & D.I Mechanical Joints	81	93
V	R.C.C. Pipes	94	98
VI	P.S.C. Pipes	99	104
VII	B.W.S.C. Pipes	105	109
VIII	G.R.P. / F.R.P. Pipes	110	115
IX	H.D.P.E. Pipes	116	122
X	M.D.P.E. Pipes	123	130
XI	P.C.C.P. Pipes	131	138
XII	Pipe Appurtenances	139	155
XIII	Mechanical Joints / Fittings	156	161
XIV	M.S. Pipes	162	180
XV	Fabrication of M.S. Pipes and Specials	181	183
XVI	M.S. Pipes Laying	184	196
XVIII	Treatment Plants (WTP / STP)	197	224
XIX	R.C.C. G.S.R's and Sumps	225	227
XX	R.C.C., E.S.R's	228	232
XX	Chambers, Manholes and Drainage Drops	233	240
J	Well Sinking and River Infiltration Works	241	245
K	Ancillary item for Reservoirs	246	249
L	Trial Run	250	250
M	Type Designs	251	294

MAHARASHTRA JEEVAN PRADHIKARAN REGION AMRAVATI
CSR 2019-20 FOR AMRAVATI REGION

SCHEDULE OF RATES FOR THE YEAR 2019-2020

GENERAL NOTES

1 These rates are applicable to all MJP works in the AMRAVATI REGION with effect from **dated 01 . 06 . 2019.**

2 Item of excavation is inclusive of normal manual dewatering, however, seperate item for dewatering shall be proposed in the estimate where underground water is anticipated in significant magnitude.

3 The rates of excavation for O & M works where limited working space is available and work is required to be carried out on emergency basis, the rate should be adopted as per actual **rate analysis which shall be approved by concerned S.E.** for that particular work only.

4 Rates for all items are excluding GST (Goods & Service Tax) levied by Government of India & State Government. While prepation of estimates priveling GST percentage provision should be made separately in recapitulation sheet. Labour rates are inclusive of EPF 12.5 % . These rates are applicable only for tendered works,these rates should be reduced by 12.5 % of labour part when works are to be carried out on piecemeal works and other small works without tendering.

5 For all completed items, **initial lead of 5 kms.** is considered for collection of materials like **sand, bricks, metal, stone** etc. Appropriate addition for lead charges excluding loading , unloading for these materials shall be done while estimation.

Following quantities shall be considered for additional lead charges beyond 5 km for material required for concrete and reinforcement for structures.

Capacity of ESR	Staging (M)	Quantity of concrete in cum	Reinforcement qty (MT)
20,000	12	27.40	2.14
30,000	12	32.70	2.55
40,000	12	37.80	2.95
50,000	12	41.90	3.27
60,000	12	46.40	3.62
70,000	12	51.20	3.99
75,000	12	53.00	4.13
80,000	12	56.00	4.37
90,000	12	62.40	4.87
125,000	25	107.40	8.38
150,000	12	89.80	7.00
160,000	12	94.30	7.36
175,000	16	117.60	9.17
200,000	20	143.60	11.20
200,000	25	157.00	12.25
250,000	25	177.00	13.81
300,000	25	206.00	16.07

Note : Spiral staircase not considered. Above quantities shall be considered for all type of foundation (SBC) and all type of Seismic Zone.

For RCC GSR

Capacity (Lit)	Concrete Qty	Reinforcement Qty (MT)
25,000	13.58	0.945
50,000	18.45	1.586
75,000	3045	2.095
1,00,000	39.31	2.707
1,50,000	54.699	3.778
2,00,000	73.313	6.577
3,00,000	95.092	9.874
5,00,000	143.277	11.900
10,00,000	222.441	15.418

(For WTP & STP works, the quantities of completed/ongoing works shall be considered)

For Capacities beyond the mentioned capacities of ESR and GSR as well as for all capacities of WTP & STPs , the Quantities shall be considered with respect to the already completed/ on going work in the region.All the concrete Items for water retaining structures are taken as M-300 grade. Hence aggregate quantity shall be 0.90 cum/cum of concrete and sand quantity shall be 0.45 cum/cum of concrete for RCC GSR, ESR ,All Treatment Plants.

6 These rates are applicable to water supply and sewerage schemes and its allied works only. Rates, for Items required for general construction, buildings, roads, Irrigation Works etc. shall be adopted from the current schedule of rates of P.W.D. or Irrigation Deptt. in respective areas. For bore wells, CSR. of GSDA shall be followed. Increase in percentage over normal schedule of rates will also be as per norms of respective C.S.R.

7 For mechanical and electrical items related to water supply and sewerage schemes, CSR for 2019-20 prepared by Superintending Engineer (Mechanical), Maharashtra Jeevan Pradhikaran shall be adopted.

8 Following increase in % over normal schedule of rates of M.J.P. for 2019-20 will be applicable. (Ref. PWD GR. No. DSR/ 1091/ CR-6577/ Planning-3, dated **08/07/2003**)

	Area	% Increase
a	Works in Corporation area	5.00%
b	Works in Municipal areas	2.00%
c	Works in tribal area / hilly and inaccesible areas	10.00%
d	Suger cane area	5.00%
e	Prison / Jail area	15.00%
f	Defence area	20.00%
g	Excavation for pipeline work along National Highway	10.00%
h	Excavation for Dist.system pipe lines,Sewerage system in towns	10.00%
i	Rajbhavan	20.00%
j	For Naxalite Area (as listed below)	10.00%

Naxalite Areas District wise

1.) YAVATMAL — Pandharkawda, Wani, Zari, Zamani, Ghatanji & Arni Tahsil.

9 In case the area of work lies under categories more than one (mentioned at Sr.No.9) the **higher percentage increase shall be made applicable** (e.g. if any Municipal Council falls in hilly area, then additional percentage in rates will be only 10 % and not with 2 % + 10 %). This additional percentage is only on completed item of work and not applicable to items of providing of materials like steel, pipes, valves, specials etc.

10 For hilly and inaccessible areas / Tribal areas approved by Government, Planning Department's Circular Nos.(1)1089/CR-66/Plan-19,DT.23/11/1990 and (2) 1094/P-36/K-1455 dt.02/09/1994, shall be followed . In addition to amendment notification by the planning deptt. time to time.

11 For Action Plan Notified Area, Government's Circular in force from time to time shall be followed.

12 Whenever basic rates of completed items are increased by percentage given at Sr. No. 9, the issue rates of materials to be supplied by the Department (if any) shall be increased by same percentage.

13 This schedule of rates is based on following basic rates for important materials.

Material	Rate in Rs. Per MT.
a Cement	4960.00
b Mild Steel	36348.00
c Tor Steel/CTD bars	41781.00
d Structural Steel	43543.00
e Corrosion Resistant Steel (Fe 500)	39202.00

14 Details of standard cement consumption and standard weight of various pipes are incorporated in this CSR .

15 Rates for supply of various types of pipes, specials and valves are exclusive of GST (Goods & Service Tax) but **inclusive of third party inspection charges,** storage charges, overhead charges and transportation of materials upto divisional stores / sites and stacking. While preparation of estimates provisions for GST should be made separately in recapitulation sheet.

16 Cost of carting of pipes and valves from departmental stores to site of work **is not considered in rate analysis,** hence this item must be incorporated in each scheme. While inviting tenders if supply is from departmental store, then this item shall appear in the tender, and if the supply is by contractor then this item shall not appear in the tender, even though same is provided in sanctioned scheme, because the contractor is supposed to bring the pipes and valves directly at site.

17 Though the contractor is required to do refilling before hydraulic testing to avoid traffic hurdle, no payment for refilling of the trenches of pipeline shall be payable till satisfactory hydraulic testing is given. Re-excavation required if any, during testing, shall be done by the contractor at his own cost.

18 10 % of cost of items of water retaining structures, such as GSR/ESR/MBR shall be retained till satisfactory hydraulic testing is given as per IS code.

19 For Dams , Balancing Tanks , Aerated Lagoons and similar structures, the rates for Film membranes as per prevailing rates for Irrigation Department will be followed.

20 Capacity of ESR / GSR to be constructed shall be rounded to nearest 1000 litres always on higher side i.e. if required capacity is 1,23,570 litre, it shall be rounded to 1,24,000 litre. Similarly, if required capacity is 8,26,070 litre, it shall be rounded to 8,27,000 litre.

21 AC/PVC pipe shall not be used in Urban areas withe respect to Circular No.130 dt.9.3.2009 of M.S.MJP HDPE pipes may be used in Distribution system of Urban areas with dia. Restricted upto 300 mm dia. Only. Provided that area where these pipes are to be laid shall not be in roccky area. HDPE pipes shall as per latest IS specifications. Also HDPE pipes upto 110 mm dia shall be in coil form.

22 Capacity of Unconventional / conventional Treatment Plants shall be rounded to nearest 0.5 Mld- always on higher side i.e. if WTP of 2.37 Mld is required; it shall be rounded to 2.5 Mld. For WTP having capacity less than 0.5 mld, package type WTP should be considered.

23 Provision for insurance @ 1% is considered in Rate analysis of CSR 2019-20. These rates are applicable only for tendered works,these rates should be reduced by 1 % of total rate when works are to be carried out on piecemeal works and other small works without tendering.

24 Rates given in this CSR are for estimation purpose only.

25 The makes of Sluice / Butterfly valves etc. to be used for inlet / outlets of ESRs / GSRs / MBRs / Pumping main / Rising main and WTP should be **from approved makes of M.J.P .**

26 Mechanical CSR rates for respective items shall be followed while estimation and the list of approved makes shall be given in the item.

27 As per Govt. Circular No.DSR 1090/CR 6453/PLN_3 dated 14-07-1993, 1% for labour amenities is considered in the DSR.

28 The royalty charges are considered in the rate analysis of CSR 2019-20 As per Revenue & Forest department ,Government of Maharashtra Notification dt.11.5.2015.

29 As per Govt. in Industries and Power GR No.BCA-2009/CR108/labour 7-A dated 17-06-2010, 1% cess on labour welfare is considered in DSR while arriving the rates.

30 Item of hydraulic testing of pipeline are included saparately in respective subwork in the Schedule of Rates.

31 In case of Water supplied by MJP cost there of shall be dedected from the item of hydraulic testing with prevalling of non domastic (Bulk supply) as per MJP notification No.MJP/F II/Cost/23/2015/dt.17.7.2015

32 In case of Geomembrane sheet to be provided by the agency, 50% Payment against supply 30% Payment against lowering, laying & 20% against hydraulic test will be given.

33 Diesel rate mentioned in the material section has been worked out with 12% reduction in the market rate of the diesel.

34 For use of ready mix cement concrete, prior permission of the Chief Engineer must be obtained.

शासन निर्णय, ग्राम विकास विभाग क्र.

ग्रापापु १०९०/सीआर-१६३/३९-अ, दि. ७ डिसेंबर १९९०

चे सहपत्र

परिशिष्ट - १

राज्यातील डोंगरी विभागाचे क्षेत्र दर्शविणारे विवरणपत्र

जिल्हा	तालुका	ज्या डोंगरी भागात आहे त्या डोंगराचे नाव	पूर्ण गट ज्या तालुक्यात ५० टक्के पेक्षा जास्त क्षेत्र आहे तो पूर्ण गट	उपगट ज्या तालुक्यात २० टक्केपेक्षा जास्त व ५० टक्के पेक्षा कमी आहे तो उप गट	शेरा
१ ठाणे वसई	१. मोखाडा	सहयाद्री पर्वत रांगा	पूर्ण गट (१)		
	२. वाडा	पश्चिम घाट	पूर्ण गट (२)		
	३. शहापूर	-- " --	पूर्ण गट (३)		
	४. मुरबाड	-- " --	पूर्ण गट (४)		
	५. जव्हार	-- " --	पूर्ण गट (५)		
	६. वसई	-- " --	-	उपगट (१)	पूर्व भाग
	७. भिवंडी	-- " --	-	उपगट (२)	उत्तर पश्चिम भाग
२. रायगड	८. कर्जत	-- " --	पूर्ण गट (६)		
	९. खालापूर	-- " --	पूर्ण गट (७)		
	१०. सुधागड	-- " --	पूर्ण गट (८)		
	११. रोहा	-- " --	पूर्ण गट (९)		
	१२. माणगांव	-- " --	पूर्ण गट (१०)		
	१३. महाड	-- " --	पूर्ण गट (११)		
	१४. पोलादपूर	-- " --	पूर्ण गट (१२)		
	१५. पेण	-- " --	पूर्ण गट (१३)		
	१६. मुरुड	-- " --	पूर्ण गट (१४)		
	१७. म्हसळा	-- " --	पूर्ण गट (१५)		
	१८. पनवेल	-- " --		उपगट (३)	दक्षिण भाग
३. रत्नागिरी	१९. खेड	-- " --	पूर्ण गट (१६)		
	२०. चिपळूण	-- " --	पूर्ण गट (१७)		
	२१. संगमेश्वर	-- " --	पूर्ण गट (१८)		
	२२. लांजा	-- " --	पूर्ण गट (१९)		
	२३. राजापूर	-- " --	पूर्ण गट (२०)		
	२४. मंडणगड	-- " --	-	उपगट (४)	उत्तरेकडील भाग
४. सिंधुदुर्ग	२५. कणकवली	-- " --	पूर्ण गट (२१)		
	२६. सावंतवाडी	-- " --	पूर्ण गट (२२)		
	२७. देवगड	-- " --	पूर्ण गट (२३)		

जिल्हा	तालुका	ज्या डोंगरी भागात आहे त्या डोंगराचे नाव	पूर्ण गट ज्या तालुक्यात ५० टक्के पेक्षा जास्त क्षेत्र आहे तो पूर्ण गट	उपगट ज्या तालुक्यात २० टक्केपेक्षा जास्त व ५० टक्के पेक्षा कमी आहे तो उप गट	शेरा
	२८. कुडाळ	-- " --	पूर्ण गट (२४)		
	२९. वैभववाडी	-- " --	पूर्ण गट (२५)		
	३०. मालवण	-- " --	-	उपगट (५)	पूर्व भाग
५. नाशिक	३१. इगतपुरी	-- " --	पूर्ण गट (२७)		
	३२. नाशिक	-- " --	पूर्ण गट (२८)		
	३३. दिंडोरी	-- " --	पूर्ण गट (२९)		
	३४. पेठ	-- " --	पूर्ण गट (३०)		
	३५. सुरगणा	-- " --	पूर्ण गट (३१)		
	३६. कळवण	-- " --	पूर्ण गट (३२)		
	३७. बागलाण (सटाणा)	-- " --	पूर्ण गट (३२)		
	३८. सिन्नर	-- " --	पूर्ण गट (३३)		
६. अहमदनगर	३९. अकोला	-- " --	पूर्ण गट (३४)		
	४०. संगमनेर		पूर्ण गट (३५)		
७. पुणे	४१. जुन्नर	सहयाद्री पर्वत रांगा	पूर्ण गट (३६)		
	४२. आंबेगांव	-- " --	पूर्ण गट (३७)		
	४३. खेड (राजगुरुनगर)	-- " --	पूर्ण गट (३८)		
	४४. मावळ	-- " --	पूर्ण गट (३९)		
	४५. हवेली	-- " --	पूर्ण गट (४०)		
	४६. मुळेशी	-- " --	पूर्ण गट (४१)		
	४७. वेल्हे	-- " --	पूर्ण गट (४२)		
	४८. भोर	-- " --	पूर्ण गट (४३)		
	४९. पुरंदर	-- " --	पूर्ण गट (४४)		
८. सातारा	५०. सातारा	-- " --	पूर्ण गट (४५)		
	५१. वाई	-- " --	पूर्ण गट (४६)		
	५२. पाटणा	-- " --	पूर्ण गट (४७)		
	५३. जावळी	-- " --	पूर्ण गट (४८)		
	५४. महाबळेश्वर	-- " --	पूर्ण गट (४९)		
	५५. खटाव	-- " --	पूर्ण गट (५०)		
	५६. खंडाळा	-- " --	पूर्ण गट (५१)		
	५७. कोरेगांव	-- " --	पूर्ण गट (५२)		
	५८. कराड	-- " --	पूर्ण गट	उपगट (६)	पूर्वेकडील पश्चिम भाग

जिल्हा	तालुका	ज्या डोंगरी भागात आहे त्या डोंगराचे नाव	पूर्ण गट ज्या तालुक्यात ५० टक्के पेक्षा जास्त क्षेत्र आहे तो पूर्ण गट	उपगट ज्या तालुक्यात २० टक्केपेक्षा जास्त व ५० टक्के पेक्षा कमी आहे तो उप गट	शेरा
				उपगट (७)	पूर्वेकडील काही भाग, दक्षिणेकडील काही भाग, उत्तरेकडील काही भाग, पश्चिमेकडील काही भाग.
	६०. फलटण	-- " --	पूर्ण गट	उपगट (८)	दक्षिणेकडील व पूर्वेकडील भाग
९. सांगली	६१. शिराळा	-- " --	पूर्ण गट (५३)		
१०. कोल्हापूर	६२. शाहूवाडी	-- " --	पूर्ण गट (५४)		
	६३. पन्हाळा	-- " --	पूर्ण गट (५५)		
	६४. करवीर	-- " --	पूर्ण गट (५६)		
	६५. गगनबावडा	-- " --	पूर्ण गट (५७)		
	६६. राधानगरी	-- " --	पूर्ण गट (५८)		
	६७. कागल	-- " --	पूर्ण गट (५९)		
	६८. भुदरगड	-- " --	पूर्ण गट (६०)		
	६९. आजरा	-- " --	पूर्ण गट (६१)		
	७०. चंदगड	-- " --	पूर्ण गट (६२)		
	७१. गडहिग्लंज	-- " --	पूर्ण गट (६३)		
११. धुळे	७२. साक्री	-- " --	पूर्ण गट (६४)		
	७३. नवापूरी	-- " --	पूर्ण गट (६५)		
	७४. अक्कलकुवा	सातपुडा डोंगरे	पूर्ण गट (६६)		
	७५. अकाणी	-- " --	पूर्ण गट (६७)		
	७६. शिरपूर	-- " --	पूर्ण गट (६८)		
	७७. शहादा	-- " --		उपगट (९)	पूर्वेकडील व थोडा उत्तरे-कडील भाग
	७८. तळोदा	-- " --		उपगट (१०)	उत्तरेकडील भाग
१२. जळगांव	७९. चोपडा	-- " --		उपगट (११)	उत्तरेकडील भाग
	८०. येवला	-- " --		उपगट (१२)	-- " --
	८१. रावेर	-- " --		उपगट (१३)	-- " --
	८२. ऐदलाबाद	-- " --		उपगट (१४)	काही भाग पूर्वेकडील व काही भाग उत्तरेकडील
१३. अमरावती	८३. धारणी	-- " --	पूर्णगट (६९)		
	८४. चिखलदरा	-- " --	पूर्णगट (७०)		

जिल्हा	तालुका	ज्या डोंगरी भागात आहे त्या डोंगराचे नाव	पूर्ण गट ज्या तालुक्यात ५० टक्के पेक्षा जास्त क्षेत्र आहे तो पूर्ण गट	उपगट ज्या तालुक्यात २० टक्केपेक्षा जास्त व ५० टक्के पेक्षा कमी आहे तो उप गट	शेरा
१४. यवतमाळ	८५. पुसद	सतमाळा रांगा	पूर्णगट	उपगट (१५)	उत्तर पश्चिमेकडील भाग, थोडा मध्यमभाग
	८६. उमरखेड	-- " --		उपगट (१६)	उत्तरेकडील व पूर्वेकडील भाग
१५. नांदेड	८७. किनवट	-- " --	पूर्णगट (७१)		
१६. अकोला	८८. पातूर	अजिंठाचे डोंगर	-	उपगट (१७)	दक्षिण व पूर्व
१७. बुलढाणा	८९. खामगांव	-- " --	-	उपगट (१८)	उत्तर व पूर्वेकडील भाग
१८. औरंगाबाद	९०. कन्नड	-- " --	-	उपगट (१९)	उत्तरे व पूर्वेकडील भाग
	९१. खुलताबाद	-- " --	-	उपगट (२०)	मधला व दक्षिणेकडील भाग
	९२. सोयगांव	अजिंठो डोंगराच्या	पूर्णगट (७२)	-	-
	९३. सिल्लोड	-- " --	-	उपगट (२१)	उत्तरेकडील व थोडा दक्षिण पश्चिमेकडील भाग
१९. परभणी	९४. हिंगोली	-- " --	-	उपगट (२२)	दक्षिणेकडील भाग
	९५. कलमनूरी	-- " --	-	उपगट (२३)	दक्षिणेकडील भाग

शासन निर्णय, ग्राम विकास विभाग क्र.

ग्रापापु १०९०/सीआर-१६३/३९-अ, दि. ७ डिसेंबर १९९० चे सहपत्र

परिशिष्ट - २

तालुकावार यादीतील उपगट म्हणून घोषित केलेल्या तालुक्यातील गावांची यादी दर्शविणारे विवरणपत्र

जिल्हा म्हणून घोषित केलेला तालुका	उपगट तालुक्यातील गावांची नावे
१) ठाणे वसई	१) चांदज २) तिपलिया ३) शिवनासा ४) पानसा ५) उसगांव ६) पारोळ ७) शिरवली ८) जळकीया १) वसई ९) सारवण १०) घाटेघर ११) भावखल १२) पेलाट १३)साजिवली १४) दापेवली १५) कार्जुरा १६) खाडेकर १७) भिडा १८) खोलसट १९)खैरे २०) संदा २१) चुडाल २२) तिल्हेस २३) सावट २४) मरतारी २५) बिलवूडा २६) गया २७) दडविरा २८) सातिवली २९) खाडी ३०) दैंडा ३१) दडीप ३२) वामन ३३) काजू ३४) कोल्ही ३५) कोळा ३६) चिंचाटी ३७) होवाऊन
२) भिवंडी	१) गणेशपूरी २) वडवली ३) उसगांव ४) धाडगांव ५) आंदीपाडा ६) गोबाटा ७) मोहिली ८) बावची ९) मालवियोर १०) बेलोली ११) उसपाडी पाडा १२) आंबराई पाडा १३) घ्यार १४) खडकी खुर्द १५) पिंपळशेत १६) खडकी बुद्रुक १७) भाऊपोळ १८) कुहापाडा १९) कुहा २०) आंबापाडा २१) देवपाडा कुलईपाडा २९) पायगांव ३०)पाया ३१) पेरुनपाडा ३२) भावडीपाडा ३३) खार भाव ३५) गाना ३६) लाकेवली ३७) चिंचपाडा ३८) गौरीपाडा ३९) डोकरपाडा ४०) अलकौअरी
रायगड ३) पनवेल	१) माणिकघर २) घोडसावना ३) सावना ४) बामणोरी ५) नामदेवी ६) देवलोळी ७) छावना ८) कालेवली ९) सारसाई १०) आपटा ११) कासव १२) कारडा १३) देवटी १४) बुलसुडा १५) अकूवडी १६) घुराडाव १७) वावेघर १८) कोष्टी १९) दापोवली २०)देवतुला २१) सावला २२) करनाहा २३) कला २४) वंडाना २५) कारल २६)दुलघट २७) कासभाट २८) दिघारी २९) हातवंडी
रत्नागिरी ४) मंडणगड	१) अंबावना बुद्रुक २) केंजालघर ३) लोरी ४) हेल्टी ५) गारीपाडा ६) पेवा ७) पांडेरी ८) पाडवा ९) अंबरसेंट १०) टी व्हेसाई ११) टेरी १२) लोकरवन १३) महाप्रत १४)हडघर १५) तांभी १६) लोहरा १७) गौरज १८) कुंभार १९) गोवेळे २०) पन्हाली २१) धुरी २२)तारवली २३) आंबेगण २४) धनगर २५) सारळ २६) अडखळ २७) व्हेसाई २८) पाट २९) अेंजला ३०) सोडली तर्फे व्हेसाई ३१) बुडळ ३२) खुर्द ३३) शिगाव ३४)साडा ३५)तळघर ३६) टाकेडी ३७) पाचरोल ३८) धामणी ३९) वोरखट ४०) गोवा ४१)धमणघर ४२) सामोटी ४३) निगडी
सिंधूदूर्ग ५) मालवण	१) कुसीस २) असरुडी ३) भवानी ४) वंजकार ५) टाटारभाव ६) भाटपावणी ७)शिरावडे ८) राटीवडे ९) आजगणी १०) ब्राम्हण ११) हिवाळे १२) ओवलीये १३)खाटले १४)डुंडुल १५) वायंनगावडे १६) वायरन १७) पोईप १८) नेसूरे १९) वाडेच्या पाट २०) नवापाट २१) गोलवणे २२) डीकवळ २३) चापेखोल २४) कुमामे २५) नांदोसा २६) तिरावडे २७)पारस २८) डेहूल

जिल्हा म्हणून घोषित केलेला तालुका	उपगट तालुक्यातील गावांची नावे
सातारा ६) कराड	१) मरळी २) चोरजवाडी ३) कोरीवळे ४) बेलदारे ५) म्होप्रे ६) भोळेवाडी ७) साकुडी ८) येणके ९) कोळे १०) कुसूर ११) तुळवण १२) सवादे १३) लाटकेवाडी १४)हवेलवाडी १५) म्हासोळी १६) शेळकेवाडी ८) मनु १९) येवती २०) घराळवाडी २१)हणमंतवाडी २२) टाळगांव २३) येळगांव २४) गौरेवाडी २५) गणेशवाडी २६)भरेवाडी २७)सोळशिरभे २८) महारगडेवाडी २९) जिती ३०) अक्काईवाडी ३१)कासारशिरमे ३२)निगडी ३३)धोलपावाडी ३४) किवळ ३५) खोडताईवाडी ३६) मसूर ३७)हणबरवाडी ३८)वाण्याची वाडी ३९) मालवाडी ४०) कांबीखाडी ४१) शिरगाव ४२)तुळी ४३)पाल ४४) हरपळवाडी ४५) रिसवड ४६) वस्ती साकडी ४७) सांजूर ४८)ताबवे ४९)आरेवाडी ५०) गमेवाडी ५१) मोळवाडी ५२) डोळेवाडी ५३) पांढरीवाडी ५४) आणे ५५) अंबवडे ५६) तारुख ६६) भवानपाडा ६७) शितलवाडी ६८) चिरवली ६९) घरचुंद ७०) कामथी ७१) वाघेरी ७२) करवडी ७३) हजरार माची ७४) वानरमाची ७५)वनवासमाची ७६)राजमाची ७७) टेंभू ७८) भयापूर ७९) कोरेगाव ८०) कार्वे ८१)वडगांव हवलेली ८२)शेपोली कालवडे
सातारा ७) फलटण	१) सालपे २) आदकीखुर्द ३) आळजापूर ४) कोराळे ५) वाघोशी ६) लाथवडा ७)मानेवाडी ८) झाडकबाईवाडी ९) वेलोशी १०) उजलवे ११) दाववाडी १२) भीरेवाडी १३) गिरवी १४) धुमाळवाडी १५) बेडकेवाडी १६) साकळ १७) भाडळी खुर्द १८)दुधेभावी १९) जावली २०) आंदुड २१) कुरवाली बु.
सातारा ८) मान	१) कळसकर वाडी २) गाडेवाडी ३) भिंडी बुद्रुक ४) पाळवण ५) तोंडले ६) उगळेवाडी ७) शिंदी बुद्रुक ८) शिंगणापूर ९) भांडळी १०) इंजतात ११) कळचांडी १२) विरळी १३)वळई १४) कुक्कडवाड १५) मखणे १६) काळेवाडी १७) बोरगेवाडी १८)किरकसाड १९) हिमानगड २०) दिवडी २१) पांढरीवाडी २२) स्वरपवानवाडी २३) शिंदी बुद्रुक २४)बोथे
धुळे ९) शाहदा	१) काकरेदे खुर्द २) काकरेदे बुद्रुक ३) कोंढावळ ४) चांदसेली ५) चिंरडे ६) वरुड बुद्रुक ७) मळगाव ८) भुलाना ९) दरा १०) राणीपूरी ११) आकसपूर १२) मानमोडया १३) नागझरी १४) लंगडी भवसनी १५) कुक्कडवाड १६) मखणे १७) आभाडपूर खुर्द १८) टरबा १९) नायगांव २०) सिसुरा २१) पेटा २२) फोफाराळे २३) चांदपूर २४) गुदा २५) इकरास २६) काटघर २७) पिरपूर
धुळे १०) तळोदा	१) सोजूरवाडा २) माळखुर्द ३) चौगाव खुर्द ४) लाकुड शेट ५) खर्डी खुर्द ६) काठोर ७) बंधारा ८) खडी बुद्रुक ९) जुवाणी १०) लाखापूर ११) माळ १२) मोरामाळ १३)आंबा गव्हाण १४) सीत पावळी १५) बामनी १६) मलुवा १७) राजापूर
जळगांव ११) चोपडा	१) मराठा २) सत्रासेन ३) खांडरा ४) भोरचिडा ५) उमरटी ६) गोवापाडा ७) कृष्णापूर ८) खाऱ्यापाडा ९) विजापूर १०) मुख्यावतार ११) शेतपाणी १२) बोअरअंनती १३)मालापूर १४) विषणापूर १५) बोरमळी १६) कर्जाणा १७) मेलाना १८) देव्हारी
जळगांव १२) येवला	१) मनुबाई देवस्थान २) लंगडया आंबा ३) गढूऱ्या ४) जामन्या ५) उसमळी ६) हरीपूरी ७) नागदेवी ८) वाघझीर ९) आसरा वारी
जळगांव १३) रावेर	१) तिडया २) अंधारमाळी ३) मोहमोडी ४) चिचाडी ५) चिमडया ६) गारखेडा ७)मोहमांडली सून ८) पिंपट कुंड ९) पाल १०) मोरव्हाल ११) जिन्सी १२)गारखेड १३)सहस्नलिंग १४) लालमाती
जळगांव १४) ऐदलाबाद	१) दुई २) सुकली ३) सोमणगांव ४) डोलरखेड ५) नोंदवेल ६) वायल ७) चारठाणे ८)देवी मंदिर ९) मोरझिरा १०) जोनधखेड ११) लालगोडा १२) हलखेंडा

जिल्हा म्हणून घोषित केलेला तालुका	उपगट तालुक्यातील गावांची नावे
बुलढाणा १५) खामगांव	१) गिरोळी २) इसालवाडी ३) चिंचखेडनाथ ४) कठडेगांव ५) चिंचखेडबंड ६) शेंद्री ७)मांडणी ८) बोथा ९) खेर्डी १०) वाकी ११) गारखेड १२) गारोडी १३) धार १४)माटरगांव १५) चिंचखेड १६) कान्टी १७) कझर १६) पिंपरी १७) धनगर १८)लाखनवाडी खुर्द १९) पत्तेपूर २०) निमखेडा २१) हिवरखेडा २२) निरोडा
अकोला १६) पातूर	१) अंबारी २) भानोसा ३) बेलवळ ४) बलकापूर ५) भोकद कंदोली ६) बडीआमराई ७)बोडसा ८) खानापूर ९) काकडदारी १०) कोठारी बुद्रुक ११) पासटल १२) कोसगांव १३) माळराजूरा १४) सावरखेड १५) चिंचखेड पातूर १६) शेकापूर १७) कार्ला १८)चारमुळी १९) धरम २०) पांदुर्णा २१) सोनुना २२) चिखलपाव्हळ २३) चोंडी २४)जांब २५) चिंचखेड २६) गोळेगांव २७) आधार सावंगी २८) गावडगाव २९)सावरगांव
यवतमाळ १७) पुसद	१) पिंपळगांव २) हौसापूर ३) बामनवाडी ४) कोऱ्होळ ५) गहूळी ६) चोडी ७) चिंचघाट ८) देवगव्हाण ९) बेलगव्हाण १०) जामनी धुद ११) मोरगड १२) उडाणी १३) पारवा १४) पांदूणी खुर्द १५) खटकोला १६) पन्हाळा १७) मांजरजवळा खुर्दा १८)मांजरजवळा १९) सावतमाळ २०) हनवंतखेड २१) मारवाडी २२) अमृतनगर २३) धनतळ २४)अनजळ २५) उपवनवाडी २६) रामपूरनगर २७) दुधगिरी २८) अनसिंग २९)जांबनाइकर ३०)शिलोना
यवतमाळ १८) उमरखेड	१) दिडाळा २) पाडी ३) पिंरजी ४) गोविदपूर ५) कुरळी ६) जाम ७) अकोली ८)सातारा ९) मसळग १०) पाडी ११) जेवळी १२) पिंपळगांव १३) बोडखा १४) पेधा १५)उदापूर १६) सावरगांव १७) परोटी १८) नानी १९) बोरी २०) धेरडी २१) पवनाळा २२)सोनदामी २३) येकंबा २४) मोरचंडी २५) कोसंबी २६) चिखली २७) रामपूर २८)बोरगांव २९)डोंगरगाव ३०) धडोली ३१) भोईर ३२) नवेलालपूर ३३) दिग्रस ३४)काटी ३५)कवठा ३६) वहेली ३७) वानोरा ३८) शिवाजीनगर ३९) जवराळा ४०)उमरी ४१)असोली ४२)सेवालालनगर ४३) वडगांव ४४) दामसरी ४५) थार बु. ४६) सेरंडी ४७) दरारी ४८) मधुरानगर
औरंगाबाद १९) सिल्लोड	१) धनशिगवाडी २) बाभुळगाव ३) पोखरी ४) बावरा ५) मोमोनाबाद ६) लेहा ७) बाधेगाव बु. ८) अंधारी ९) जातवा १०) अमरावती ११) घाटनांदा १२) परदेशीवाडी १३) चारनेर १४) धावडा १५) अंधारवाडी १६) कडेगाव १७) सिरसाम १८) नातेगाव १९) घाटमखेळ २०) हालदा २१) पिंपळदरी २२) मुखबार २३) वाघरा २४) रांजणी २५) अजिंठा २६) अनाड २७) आमसरी २८) नारवी २९) वडाळी

जिल्हा म्हणून घोषित केलेला तालुका	उपगट तालुक्यातील गावांची नावे
परभणी २०) हिंगोली	१) नरसी २) लोहगांव ३) सेवली ४) पिंपळी ५) बोरळा ६) जळगांव ७) शेलेगांव ८)सोनेगांव ९) पिंपरखेड १०) देवळा ११) अनपनवाडी १२) ससुळापूर १३)माथा १४)मूर्तिजापूर १५) केहरपिंपरी १६) सिध्देश्वर १७) दिघुळ १८)टुडचना १९)बडचुना २०)ओढा २१)हनुमानदरी २२) शिवकार २३) जामला २४) जामदन २५)बैजापूर २६)खंबाळा २७) फासेले २८) तबलीगव्हाण २९) मांडेगांव ३०)राख ३१)जामरी खुर्द ३२)पांगरी ३३)बोराळा ३४) नांदूरा ३५) कडवी ३६) आमनखेड ३७)ब्रम्हपूरी ३८)खळगांव ३९) जामसन ४०) पारडी ४१) खळगांव ४२) रिधोस ४३) तेजगांव ४४)कोळंब ४५)सूकली बु. ४६) सुकली ४७) शिंदेपळ ४८) धनगरवाडी ४९) सबळखेड ५०)बाभुळगांव ५१) गोरेगाव ५२) पोंडीखुर्द ५३) ब्रम्हणवाडी ५४) पिंपरी पाथबळ ५५)बोरखेड ५६) एकवा ५७) खंडाळा ५८) चिंचोळी ५९) बेलरा ६०) आडगांव ६१)देवठाण ६२) काळेगांव ६३) कलोखेड ६४) कपकुली ६५) चाटोना ६६)देवठाण
औरंगाबाद २१) कन्नड	१) तांदूळवाडी २) पेवली ३) मुमसापूर ४) पेकडवाडी ५) कोंडवाडी ६) कल्याणी ७)वडनेर ८) अंबाला ९) आंबा १०) जामडी ११) रेळ १२)कुंजखेड १३)नांदगिरवाडी १४)हिवरखेड १५) वडाळी १६) जेतखेड १७) मालेगांव ढोंकळ १८)भारवा १९)मालेगांव लाखोंडे २०) मोहाडी २१) हस्ता २२) माहेगांव २३) चेडसर २४)पळशी खुर्द २५)कांबळी २६) भिलदरी २७) गोर पिंपरी २८) सवखेड बु. २९) पिंपरखोडा ३०)सफीयाबाद ३१)खडकी ३२) पिशीर ३३) भातवाडी ३४) वासडी ३५) निंभोरा ३६)उमरखेड ३७)सावरगांव ३८) धामणी ३९) आंबेवाडी बु. ४०) मेहुण ४१)हारेवाडी ४२)वडगांव ४३)लोझा ४४) पांगेरी ४५) भापेवाडी ४६) सोनवाडी ४७) शिवघाट ४८)चिमणापूर ४९)नागापूर ५०) करंजखेड ५१) रेडळगांव ५२) नेवूपूर ५३)घाटशेंटा ५४)टाकळी ५५)अंतूर ५६) लोहगांव
औरंगाबाद २२) खुलाताबाद	१) वडगांव २) पाडळी ३) शिरोळ बु. ४) सावरखेडा ५) लोधी ६) बोडक ७) खुलताबाद ८) धामणगांव ९) अब्दुलापूर १०) निरगुडी बु. ११) पिंपरी १२) जमालवाडी १३)म्हैसमाळ १४) शिरसमाळ १५) टाकळी खुर्द १६) आखतवाड १७) वेरुळ १८)मंत्रापूर १९) खुलताबाद २०) सराई २१) बदलाबाई २२) नंदुबाद २३) मापसाळा २४)रसुलपूर २५) शंकरपूरवाडी २६) साबुखेडा २७) खिर्डी २८) सोनखेडा २९) भटजी ३०)लामनगांव ३१) खोतेनापूर ३२) विरमगांव
परभणी २३) कळमनुरी	१) खेड २) धानापूर ३) धोतरा ४) अमरखोजा ५) शिरसखुर्द ६) शिरस बुद्रुक ७)डिग्रस वापी ८) पिंपळी ९) सांडस १०) रेटकर ११) वराडी १२) खडकत बुद्रुक १३)खडकस खुर्द १४) मंदारी १५) गारखेड १६) महरी खुर्द १७) खडकेत १८) बैज १९) दुधेरी २०)चिंचोळी २१) खोडतला २२) पेडगांव २३) डोंगी २४) नांदुरा २५) बोलापूरी २६)तळेगांव २७) जावा २८) मिसे बुद्रुक २९) कापस ३०) शिपगी ३१) माळवाडी ३२)दाडेगांव ३३) मोतीचोर ३४) विठ्ठलवाडी ३५) पिंपरी खुर्द ३६) कानेगाव ३७)फाटणा ३८) दाभाडी ३९) पुंचा ४०) मोरगांव

MATERIAL

S.No.	Description	Unit	Rate (in Rs.) 2019-20
1	Acetylene Gas	Cylinder	**660.00**
2	Alum Grade IV Ex-factory	Mt	**7385.00**
3	Binding Wire	Kg	**67.00**
4	Black enemal paint Anti corrosive	Ltr	**178.31**
5	Bricks	No	**5.00**
6	Bullies, Struts (125 mm dia 1.5 M long)	rmt	**170.00**
7	C.C.Teak wood planks(3" X 6")	Cum	**65767.00**
8	Cement (Bags)	Bag	**248.00**
9	Cement (M.T.)	Mt	**4960.00**
10	Cement Sulphar Resistant	M.T.	**6158.00**
11	Charcoal	Kg	**23.00**
12	Coarse sand	Cum	**900.00**
13	Corrosion Resistant steel	Mt	**39202.00**
14	Diesel	Lit	**57.85**
15	Epoxy paint	Kg	**364.00**
16	Fuse	No	**19.00**
17	Gun Powder	Kg	**66.00**
18	Kasarde sand (for mortar lining work) @ source	cum	**1744.00**
19	Liquid chlorine 100 kg Deptt Container	No.	**2499.00**
20	Liquid chlorine 900 kg Supplier Containor	No.	**14275.00**
21	Lubricant Oil	lit	**200.00**
22	M.S.angle(50x50x6mm)	Kg	**40.00**
23	M.S.Bars (Delivery at site)	Mt	**36348.00**
24	M.S.Bars (in kgs)	Kg	**36.75**
25	M.S.Flats (40 mm x 3 mm)	Kg	**42.36**
26	M.S.plate	Kg	**46.54**
27	Mild steel grill railing	Kg	**62.00**
28	Mild steel Grill ready	Kg	**62.00**
29	Mobile oil	Lit	**241.00**
30	Murum	cum	**240.00**
31	Nails	Kg	**61.00**
32	Nutbolts	Kg	**79.00**

S.No.	Description	Unit	Rate (in Rs.) 2019-20
33	Oxygen Gas (Refill)	Cylinder	**303.00**
34	PAC medium basicity in liquid form.	MT	**9596.00**
35	PAC medium basicity in powder form.	MT	**28100.00**
36	Plywood Commercial 12 mm thick Waterproof for centering	sqm	**441.00**
37	Polling board	cum	**14673.00**
38	R.S.Joist channel etc	MT	**44288.00**
39	Rapid sand Gravity filter Gravel At Source	Cum	**1525.00**
40	Rapid sand Gravity filter Gravel At Source (Godhara, Gokak, Vainganga, Yesagi sand)	Cum	**1525.00**
41	Ready mix alluminium paint	Lit	**291.00**
42	Ready mix oil paint	Ltr	**204.00**
43	Ready mix primer for steel	Ltr	**142.00**
44	Ready mix synthetic enamel paint	Lit	**150.00**
45	Ready mixed lead/zinc paint	Ltr	**183.00**
46	Rubber Gasket (8 mm thick)	Kg	**74.00**
47	Rubble	cum	**446.00**
48	Sand	cum	**1000.00**
49	Spun Yarn	Kg	**89.00**
50	Stone Aggregate 10 mm	cum	**809.00**
51	Stone Aggregate 20 mm	cum	**809.00**
52	Stone Aggregate 40 mm	cum	**809.00**
53	Structural Steel	M.T.	**43543.00**
54	T.C.L.(bleaching poweder Gr.I) (25 kg pack)	Kg	**21.00**
55	Teak wood	Cum	**62888.00**
56	Tor Steel	Mt	**41781.00**
57	Walling (100x100mm)	cum	**14632.00**
58	Welding Rod Having weight 5.25 kg	Box	**1210.00**
59	White cement	Kg	**24.00**
60	White lead	Kg	**159.00**
61	Wire	Kg	**75.00**

LABOUR

S.No.	Description	Unit	Rate (in Rs.) 2019-20
1	Asst Fitter	No.	**512.00**
2	Bhandhani	No.	**512.00**
3	Bhisti with pakahal	No.	**512.00**
4	Blacksmith IInd class	No.	**512.00**
5	Breaker	No.	**512.00**
6	Carpainter 1st class	No.	**539.00**
7	Carpainter 2nd class	No.	**539.00**
8	Chiseller	No.	**512.00**
9	Computer Operator (data entryoperator)	No.	**539.00**
10	Electrician	No.	**539.00**
11	Excavator	No.	**493.00**
12	Filter Operator	No.	**539.00**
13	Fitter 1st class	No.	**539.00**
14	Glazier	No.	**539.00**
15	Helper	No.	**493.00**
16	Hole Driller	No.	**512.00**
17	L.M.V. Driver	No.	**539.00**
18	Maistry	No.	**539.00**
19	Mali	No.	**493.00**
20	Mason 1st class	No.	**539.00**
21	Mason 2nd class	No.	**539.00**
22	MAZDOOR (FEMALE)	No.	**493.00**
23	Mazdoor (Light)	No.	**493.00**
24	MAZDOOR (MALE)	No.	**493.00**
25	Mazdoor(Heavy)	No.	**493.00**
26	Meter Reader	No.	**539.00**
27	Mukadam	No.	**539.00**
28	Painter	No.	**539.00**
29	Painter (for coloring)	No.	**539.00**
30	Plumber (Building)	No.	**512.00**
31	Polisher	No.	**539.00**
32	Pump Driver	No.	**512.00**
33	Stone Cutter or dresser	No.	**539.00**
34	Tile layer	No.	**539.00**
35	TileTurner	No.	**539.00**
36	Welder	No.	**539.00**
37	Welder for pipe line	No.	**539.00**
38	WhiteWasher	No.	**512.00**
39	Wireman	No.	**539.00**

MACHINERY

S.No.	Description	Unit	Rate (in Rs.) 2019-20
1	Desludging/ Desilting pump	Day	**2646.00**
2	Jeep hire charges with driver and fuel (Upto 300 KM.)	Day	**3509.10**
3	Pipe cutter with opertor	Day	**1378.65**
4	Plate Bender	Day	**945.00**
5	Rent charges for pump excluding operator & excluding fuel	BHP-Day	**189.00**
6	Rent for chain pully block with tripod	Day	**472.50**
7	Rent for Compressor with fuel	Day	**2756.25**
8	Rent for Concrete breaker & Compressor	Day	**2625.00**
9	Rent for Crane	Hour	**1433.25**
10	Rent for JCB	Hour	**1102.50**
11	Rent for Mech.Mixer with fuel & crew	Day	**2535.75**
12	Rent for poclain	Hour	**2205.00**
13	Rent for vibrator with fuel and crew	Day	**992.25**
14	Rent for welding set with Electric set	Day	**1155.00**
15	Rent for welding set with Generator	Day	**2520.00**
16	Truck hire charges for 20 km to 50 km	Day	**2295.00**
17	Truck hire charges for 50 km & above	Day	**1748.00**
18	Truck hire charges upto 20 km	Day	**2513.00**

STATEMENT II

Including loading, unloading and stacking

Lead in km	Av. Speed	No. of Trips (N) = 8/ ((2L/S)+1)	Km. Done (2NL+6)	Litres of Diesel consumed	Cost of diesel @ 52.51/lit	Lit. of Mobile oil consumed	cost of M.oil @ 239.80/ lit	cost of 6 mazdoor 385.88/ day	Hire charges of truck Rs. Per day	Total cost (6+8+9+10)	Add 10% overhead charges	Total (11+12)	cost per trip (13/3)
1	2	3	4	5	6	7	8	9	10	11	12	13	14
0.5	15.00	7.50	13.50	4.50	260.33	0.10	23.15	3327.75	2513.00	6124.23	612.42	6736.65	898.22
1.0	16.00	7.11	20.22	6.74	389.91	0.14	34.72	3327.75	2513.00	6265.38	626.54	6891.92	969.33
1.5	16.50	6.77	26.31	8.77	507.34	0.19	45.33	3327.75	2513.00	6393.42	639.34	7032.76	1038.81
2.0	17.00	6.48	31.92	10.64	615.52	0.23	54.98	3327.75	2513.00	6511.25	651.13	7162.38	1105.31
2.5	17.25	6.20	37.00	12.33	713.29	0.26	63.66	3327.75	2513.00	6617.70	661.77	7279.47	1174.11
3.0	17.50	5.96	41.76	13.92	805.27	0.30	71.86	3327.75	2513.00	6717.88	671.79	7389.67	1239.88
3.5	17.75	5.74	46.18	15.39	890.31	0.33	79.57	3327.75	2513.00	6810.63	681.06	7491.69	1305.17
4.0	18.00	5.54	50.32	16.77	970.14	0.36	86.57	3327.75	2513.00	6897.46	689.75	7587.21	1369.53
4.5	18.25	5.36	54.24	18.08	1045.93	0.39	93.32	3327.75	2513.00	6980.00	698.00	7678.00	1432.46
5.0	18.50	5.19	57.90	19.30	1116.51	0.41	99.83	3327.75	2513.00	7057.09	705.71	7762.80	1495.72
6.0	18.75	4.88	64.56	21.52	1244.93	0.46	111.16	3327.75	2513.00	7196.84	719.68	7916.52	1622.24
7.0	19.00	4.61	70.54	23.51	1360.05	0.50	121.53	3327.75	2513.00	7322.33	732.23	8054.56	1747.19
8.0	19.18	4.36	75.76	25.25	1460.71	0.54	130.45	3327.75	2513.00	7431.91	743.19	8175.10	1875.02
9.0	19.60	4.17	81.06	27.02	1563.11	0.58	139.61	3327.75	2513.00	7543.47	754.35	8297.82	1989.88
10	20.00	4.00	86.00	28.67	1658.56	0.61	148.05	3327.75	2513.00	7647.36	764.74	8412.10	2103.03
15	25.00	3.64	115.20	38.40	2221.44	0.82	198.45	3327.75	2513.00	8260.64	826.06	9086.70	2496.35
20	25.00	3.08	129.20	43.07	2491.60	0.92	222.56	3327.75	2513.00	8554.91	855.49	9410.40	3055.32
25	25.00	2.67	139.50	46.50	2690.03	1.00	240.17	3327.75	2295.00	8552.95	855.30	9408.25	3523.69
30	25.00	2.35	147.00	49.00	2834.65	1.05	253.19	3327.75	2295.00	8710.59	871.06	9581.65	4077.30
35	30.00	2.40	174.00	58.00	3355.30	1.24	299.72	3327.75	2295.00	9277.77	927.78	10205.55	4252.31
40	30.00	2.18	180.40	60.13	3478.52	1.29	310.82	3327.75	2295.00	9412.09	941.21	10353.30	4749.22
45	30.00	2.00	186.00	62.00	3586.70	1.33	320.46	3327.75	2295.00	9529.91	952.99	10482.90	5241.45
50	30.00	1.85	191.00	63.67	3683.31	1.36	328.90	3327.75	2295.00	9634.96	963.50	10598.46	5728.90
60	30.00	1.60	198.00	66.00	3818.10	1.41	340.96	3327.75	1748.00	9234.81	923.48	10158.29	6348.93
70	30.00	1.41	203.40	67.80	3922.23	1.45	350.36	3327.75	1748.00	9348.34	934.83	10283.17	7293.03
80	30.00	1.26	207.60	69.20	4003.22	1.48	357.60	3327.75	1748.00	9436.57	943.66	10380.23	8238.28
90	30.00	1.14	211.20	70.40	4072.64	1.51	363.87	3327.75	1748.00	9512.26	951.23	10463.49	9178.50
100	40.00	1.33	272.00	90.67	5245.26	1.94	468.52	3327.75	1748.00	10789.53	1078.95	11868.48	8923.67
125	40.00	1.10	281.00	93.67	5418.81	2.01	483.95	3327.75	1748.00	10978.51	1097.85	12076.36	10978.51
150	40.00	0.94	288.00	96.00	5553.60	2.06	496.00	3128.09	1748.00	10925.69	1092.57	12018.26	12785.38
175	40.00	0.82	293.00	97.67	5650.21	2.09	504.69	2728.76	1748.00	10631.66	1063.17	11694.83	14261.99
200	40.00	0.73	298.00	99.33	5746.24	2.13	513.37	2429.26	1748.00	10436.87	1043.69	11480.56	15726.79

Lead in km	Av. Speed	No. of Trips (N) = 8/ ((2L/S)+1)	Km. Done (2NL+6)	Litres of Diesel consumed	Cost of diesel @ 52.51/lit	Lit. of Mobile oil consumed	cost of M.oil @ 239.80/ lit	cost of 6 mazdoor 385.88/ day	Hire charges of truck Rs. Per day	Total cost (6+8+9+10)	Add 10% overhead charges	Total (11+12)	cost per trip (13/3)
1	2	3	4	5	6	7	8	9	10	11	12	13	14
250	40.00	0.59	301.00	100.33	5804.09	2.15	518.43	1963.37	1748.00	10033.89	1003.39	11037.28	18707.25
300	45.00	0.56	342.00	114.00	6594.90	2.44	589.08	1863.54	1748.00	10795.52	1079.55	11875.07	21205.48
420	45.00	0.41	350.40	116.80	6756.88	2.50	603.55	1364.38	1748.00	10472.81	1047.28	11520.09	28097.78
540	45.00	0.32	351.60	117.20	6780.02	2.51	605.48	1064.88	1748.00	10198.38	1019.84	11218.22	35056.94
660	45.00	0.26	349.20	116.40	6733.74	2.49	601.38	865.22	1748.00	9948.34	994.83	10943.17	42089.12
780	45.00	0.22	349.20	116.40	6733.74	2.49	601.38	732.11	1748.00	9815.23	981.52	10796.75	49076.14
900	45.00	0.20	366.00	122.00	7057.70	2.61	630.31	665.55	1748.00	10101.56	1010.16	11111.72	55558.60
1020	45.00	0.17	352.80	117.60	6803.16	2.52	607.65	565.72	1748.00	9724.53	972.45	10696.98	62923.41
1140	45.00	0.15	348.00	116.00	6710.60	2.49	599.45	499.16	1748.00	9557.21	955.72	10512.93	70086.20

Note:

1) **No. of trips in a working of 8 hours N=8 / (2(L+S) + 1) where L = Lead in km and S = speed, 1 hour is allowed for loading**

2) **Consumption of diesel taken as 3 km / litre**

3) **Consumption of Mobile oil taken as 140 km / litre**

4) **In col. 4 6 hours has been added for movement from parking place to duty and back**

5) **Hire charges will remain Rs. 500.00 for 1200 and above km lead**

6) **Labour required for loading unloading and stacking after the No. of trips reduced below 1 is factorised with actual number of trip.**

STATEMENT III

Excluding loading, unloading and stacking

Lead in km	Av. Speed	No. of Trips (N) = 8/ ((2L/S)+1)	Km. Done (2NL+6)	Litres of Diesel consumed	Cost of diesel @ 52.51/lit	Lit. of Mobile oil consumed	cost of M.oil @ 239.80/ lit	cost of 6 mazdoor 385.88/ day	Hire charges of truck Rs. Per day	Total cost (6+8+9+10)	Add 10% overhead charges	Total (11+12)	cost per trip (13/3)
1	2	3	4	5	6	7	8	9	10	11	12	13	14
0.5	15.00	7.50	13.50	4.50	260.33	0.10	23.15	0.00	2513.00	2796.48	279.65	3076.13	410.15
1.0	16.00	7.11	20.22	6.74	389.91	0.14	34.72	0.00	2513.00	2937.63	293.76	3231.39	454.49
1.5	16.50	6.77	26.31	8.77	507.34	0.19	45.33	0.00	2513.00	3065.67	306.57	3372.24	498.12
2.0	17.00	6.48	31.92	10.64	615.52	0.23	54.98	0.00	2513.00	3183.50	318.35	3501.85	540.41
2.5	17.25	6.20	37.00	12.33	713.29	0.26	63.66	0.00	2513.00	3289.95	329.00	3618.95	583.70
3.0	17.50	5.96	41.76	13.92	805.27	0.30	71.86	0.00	2513.00	3390.13	339.01	3729.14	625.69
3.5	17.75	5.74	46.18	15.39	890.31	0.33	79.57	0.00	2513.00	3482.88	348.29	3831.17	667.45
4.0	18.00	5.54	50.32	16.77	970.14	0.36	86.57	0.00	2513.00	3569.71	356.97	3926.68	708.79
4.5	18.25	5.36	54.24	18.08	1045.93	0.39	93.32	0.00	2513.00	3652.25	365.23	4017.48	749.53
5.0	18.50	5.19	57.90	19.30	1116.51	0.41	99.83	0.00	2513.00	3729.34	372.93	4102.27	790.42
6.0	18.75	4.88	64.56	21.52	1244.93	0.46	111.16	0.00	2513.00	3869.09	386.91	4256.00	872.13
7.0	19.00	4.61	70.54	23.51	1360.05	0.50	121.53	0.00	2513.00	3994.58	399.46	4394.04	953.15
8.0	19.18	4.36	75.76	25.25	1460.71	0.54	130.45	0.00	2513.00	4104.16	410.42	4514.58	1035.45
9.0	19.60	4.17	81.06	27.02	1563.11	0.58	139.61	0.00	2513.00	4215.72	421.57	4637.29	1112.06
10	20.00	4.00	86.00	28.67	1658.56	0.61	148.05	0.00	2513.00	4319.61	431.96	4751.57	1187.89
15	25.00	3.64	115.20	38.40	2221.44	0.82	198.45	0.00	2513.00	4932.89	493.29	5426.18	1490.71
20	25.00	3.08	129.20	43.07	2491.60	0.92	222.56	0.00	2513.00	5227.16	522.72	5749.88	1866.84
25	25.00	2.67	139.50	46.50	2690.03	1.00	240.17	0.00	2295.00	5225.20	522.52	5747.72	2152.70
30	25.00	2.35	147.00	49.00	2834.65	1.05	253.19	0.00	2295.00	5382.84	538.28	5921.12	2519.63
35	30.00	2.40	174.00	58.00	3355.30	1.24	299.72	0.00	2295.00	5950.02	595.00	6545.02	2727.09
40	30.00	2.18	180.40	60.13	3478.52	1.29	310.82	0.00	2295.00	6084.34	608.43	6692.77	3070.08
45	30.00	2.00	186.00	62.00	3586.70	1.33	320.46	0.00	2295.00	6202.16	620.22	6822.38	3411.19
50	30.00	1.85	191.00	63.67	3683.31	1.36	328.90	0.00	2295.00	6307.21	630.72	6937.93	3750.23
55	30.00	1.71	194.10	64.70	3742.90	1.39	334.21	0.00	1748.00	5825.11	582.51	6407.62	3747.15
65	30.00	1.50	201.00	67.00	3875.95	1.44	346.26	0.00	1748.00	5970.21	597.02	6567.23	4378.15
75	30.00	1.33	205.50	68.50	3962.73	1.47	353.98	0.00	1748.00	6064.71	606.47	6671.18	5015.92
85	30.00	1.20	210.00	70.00	4049.50	1.50	361.70	0.00	1748.00	6159.20	615.92	6775.12	5645.93
95	40.00	1.39	270.10	90.03	5208.24	1.93	465.14	0.00	1748.00	7421.38	742.14	8163.52	5873.04
105	40.00	1.28	274.80	91.60	5299.06	1.96	473.34	0.00	1748.00	7520.40	752.04	8272.44	6462.84
130	40.00	1.07	284.20	94.73	5480.13	2.03	489.49	0.00	1748.00	7717.62	771.76	8489.38	7934.00
155	40.00	0.91	288.10	96.03	5555.34	2.06	496.25	0.00	1748.00	7799.59	779.96	8579.55	9428.08
180	40.00	0.80	294.00	98.00	5669.30	2.10	506.37	0.00	1748.00	7923.67	792.37	8716.04	10895.05
230	40.00	0.64	300.40	100.13	5792.52	2.15	517.46	0.00	1748.00	8057.98	805.80	8863.78	13849.66

Lead in km	Av. Speed	No. of Trips (N) = 8/ ((2L/S)+1)	Km. Done (2NL+6)	Litres of Diesel consumed	Cost of diesel @ 52.51/lit	Lit. of Mobile oil consumed	cost of M.oil @ 239.80/ lit	cost of 6 mazdoor 385.88/ day	Hire charges of truck Rs. Per day	Total cost (6+8+9+10)	Add 10% overhead charges	Total (11+12)	cost per trip (13/3)
1	2	3	4	5	6	7	8	9	10	11	12	13	14
280	45.00	0.60	342.00	114.00	6594.90	2.44	589.08	0.00	1748.00	8931.98	893.20	9825.18	16375.30
400	45.00	0.43	350.00	116.67	6749.36	2.50	602.83	0.00	1748.00	9100.19	910.02	10010.21	23279.56
520	45.00	0.33	349.20	116.40	6733.74	2.49	601.38	0.00	1748.00	9083.12	908.31	9991.43	30277.06
640	45.00	0.27	351.60	117.20	6780.02	2.51	605.48	0.00	1748.00	9133.50	913.35	10046.85	37210.56
760	45.00	0.23	355.60	118.53	6856.96	2.54	612.47	0.00	1748.00	9217.43	921.74	10139.17	44083.35
880	45.00	0.20	358.00	119.33	6903.24	2.56	616.57	0.00	1748.00	9267.81	926.78	10194.59	50972.95
1000	45.00	0.18	366.00	122.00	7057.70	2.61	630.31	0.00	1748.00	9436.01	943.60	10379.61	57664.50
1120	45.00	0.16	364.40	121.47	7027.04	2.60	627.66	0.00	1748.00	9402.70	940.27	10342.97	64643.56

STATEMENT VI

Including loading, unloading and stacking

Lead in km	Cost / trip	Lime murum building rubbish	Earth	Manure or sludge	Excavated rock	Sand stone aggregate 40 mm & below	Aggregate 40 mm & above	Soling stone	Concrete block (form)	Timber
1	2	3	4	5	6	7	8	9	10	11
	Pay load	**6.0 cum**	**4.8 cum**	**5.52 cum**	**3.0 cum**	**5.75 cum**	**5.5 cum**	**4.7 cum**	**6.0 cum**	**5.0 cum**
0.5	898.22	149.70	187.13	162.72	299.41	156.21	163.31	191.11	149.70	156.21
1.0	969.33	161.56	201.94	175.60	323.11	168.58	176.24	206.24	161.56	168.58
1.5	1038.81	173.14	216.42	188.19	346.27	180.66	188.87	221.02	173.14	180.66
2.0	1105.31	184.22	230.27	200.24	368.44	192.23	200.97	235.17	184.22	192.23
2.5	1174.11	195.69	244.61	212.70	391.37	204.19	213.47	249.81	195.69	204.19
3.0	1239.88	206.65	258.31	224.62	413.29	215.63	225.43	263.80	206.65	215.63
3.5	1305.17	217.53	271.91	236.44	435.06	226.99	237.30	277.70	217.53	226.99
4.0	1369.53	228.26	285.32	248.10	456.51	238.18	249.01	291.39	228.26	238.18
4.5	1432.46	238.74	298.43	259.50	477.49	249.12	260.45	304.78	238.74	249.12
5.0	1495.72	249.29	311.61	270.96	498.57	260.13	271.95	318.24	249.29	260.13
6.0	1622.24	270.37	337.97	293.88	540.75	282.13	294.95	345.16	270.37	282.13
7.0	1747.19	291.20	364.00	316.52	582.40	303.86	317.67	371.74	291.20	303.86
8.0	1875.02	312.50	390.63	339.68	625.01	326.09	340.91	398.94	312.50	326.09
9.0	1989.88	331.65	414.56	360.49	663.29	346.07	361.80	423.38	331.65	346.07
10	2103.03	350.51	438.13	380.98	701.01	365.74	382.37	447.45	350.51	365.74
15	2496.35	416.06	520.07	452.24	832.12	434.15	453.88	531.14	416.06	434.15
20	3055.32	509.22	636.53	553.50	1018.44	531.36	555.51	650.07	509.22	531.36
25	3523.69	587.28	734.10	638.35	1174.56	612.82	640.67	749.72	587.28	612.82
30	4077.30	679.55	849.44	738.64	1359.10	709.10	741.33	867.51	679.55	709.10
35	4252.31	708.72	885.90	770.35	1417.44	739.53	773.15	904.75	708.72	739.53
40	4749.22	791.54	989.42	860.37	1583.07	825.95	863.49	1010.47	791.54	825.95
45	5241.45	873.58	1091.97	949.54	1747.15	911.56	952.99	1115.20	873.58	911.56
50	5728.90	954.82	1193.52	1037.84	1909.63	996.33	1041.62	1218.91	954.82	996.33
60	6348.93	1058.16	1322.69	1150.17	2116.31	1104.16	1154.35	1350.84	1058.16	1104.16
70	7293.03	1215.51	1519.38	1321.20	2431.01	1268.35	1326.01	1551.71	1215.51	1268.35
80	8238.28	1373.05	1716.31	1492.44	2746.09	1432.74	1497.87	1752.83	1373.05	1432.74
90	9178.50	1529.75	1912.19	1662.77	3059.50	1596.26	1668.82	1952.87	1529.75	1596.26
100	8923.67	1487.28	1859.10	1616.61	2974.56	1551.94	1622.49	1898.65	1487.28	1551.94
125	10978.51	1829.75	2287.19	1988.86	3659.50	1909.31	1996.09	2335.85	1829.75	1909.31
150	12785.38	2130.90	2663.62	2316.19	4261.79	2223.54	2324.61	2720.29	2130.90	2223.54
175	14261.99	2377.00	2971.25	2583.69	4754.00	2480.35	2593.09	3034.47	2377.00	2480.35
200	15726.79	2621.13	3276.41	2849.06	5242.26	2735.09	2859.42	3346.13	2621.13	2735.09
250	18707.25	3117.88	3897.34	3388.99	6235.75	3253.43	3401.32	3980.27	3117.88	3253.43
300	21205.48	3534.25	4417.81	3841.57	7068.49	3687.91	3855.54	4511.80	3534.25	3687.91
420	28097.78	4682.96	5853.70	5090.18	9365.93	4886.57	5108.69	5978.25	4682.96	4886.57

Lead in km	Cost / trip	Lime murum building rubbish	Earth	Manure or sludge	Excavated rock	Sand stone aggregate 40 mm & below	Aggregate 40 mm & above	Soling stone	Concrete block (form)	Timber
1	2	3	4	5	6	7	8	9	10	11
	Pay load	**6.0 cum**	**4.8 cum**	**5.52 cum**	**3.0 cum**	**5.75 cum**	**5.5 cum**	**4.7 cum**	**6.0 cum**	**5.0 cum**
540	35056.94	5842.82	7303.53	6350.89	11685.65	6096.86	6373.99	7458.92	5842.82	6096.86
660	42089.12	7014.85	8768.57	7624.84	14029.71	7319.85	7652.57	8955.13	7014.85	7319.85
780	49076.14	8179.36	10224.20	8890.61	16358.71	8534.98	8922.93	10441.73	8179.36	8534.98
900	55558.60	9259.77	11574.71	10064.96	18519.53	9662.37	10101.56	11820.98	9259.77	9662.37
1020	62923.41	10487.24	13109.04	11399.17	20974.47	10943.20	11440.62	13387.96	10487.24	10943.20
1140	70086.20	11681.03	14601.29	12696.78	23362.07	12188.90	12742.95	14911.96	11681.03	12188.90

STATEMENT VII

Including loading, unloading and stacking

Lead in km	Cost / trip	Cement stone block, GI CI CC AC Pipes below 120 mm dia	Tar bitumenn Asphalt roofing felt & Flooring Asphalt etc.	Steam coal	Matting thatching bambu ceiling board rubber PVC pipes fittings	Sheet & plate glass in packs Paints & Distempers AC Sheets & fittings iron fittings and iron sheets	Bricks modular bricks & Traditional bricks	Tiles half round tiles & Roofing tiles cement flooring tiles	Glass blocks (hollow) 200x200 x120 mm	Empty cement bags
1	2	3	4	5	6	7	8	9	10	11
	Pay load	7.0 Mt	4.5 MT	5.5 MT	3.0 MT	7.0 MT	3500 No.	3200 No.	1000 No.	2000 No.
		per 1 M.T.	**per 1 M.T.**	**per 1 M.T.**	**per 1 M.T.**	**per 1 M.T.**	**per 1000 Nos.**	**per 1000 Nos.**	**per 1000 Nos.**	**per 1000 Nos.**
0.5	898.22	128.32	199.60	163.31	299.41	128.32	256.63	280.69	89.82	449.11
1.0	969.33	138.48	215.41	176.24	323.11	138.48	276.95	302.92	96.93	484.67
1.5	1038.81	148.40	230.85	188.87	346.27	148.40	296.80	324.63	103.88	519.41
2.0	1105.31	157.90	245.62	200.97	368.44	157.90	315.80	345.41	110.53	552.66
2.5	1174.11	167.73	260.91	213.47	391.37	167.73	335.46	366.91	117.41	587.06
3.0	1239.88	177.13	275.53	225.43	413.29	177.13	354.25	387.46	123.99	619.94
3.5	1305.17	186.45	290.04	237.30	435.06	186.45	372.91	407.87	130.52	652.59
4.0	1369.53	195.65	304.34	249.01	456.51	195.65	391.29	427.98	136.95	684.77
4.5	1432.46	204.64	318.32	260.45	477.49	204.64	409.27	447.64	143.25	716.23
5.0	1495.72	213.67	332.38	271.95	498.57	213.67	427.35	467.41	149.57	747.86
6.0	1622.24	231.75	360.50	294.95	540.75	231.75	463.50	506.95	162.22	811.12
7.0	1747.19	249.60	388.26	317.67	582.40	249.60	499.20	546.00	174.72	873.60
8.0	1875.02	267.86	416.67	340.91	625.01	267.86	535.72	585.94	187.50	937.51
9.0	1989.88	284.27	442.20	361.80	663.29	284.27	568.54	621.84	198.99	994.94
10	2103.03	300.43	467.34	382.37	701.01	300.43	600.87	657.20	210.30	1051.52
15	2496.35	356.62	554.74	453.88	832.12	356.62	713.24	780.11	249.64	1248.18
20	3055.32	436.47	678.96	555.51	1018.44	436.47	872.95	954.79	305.53	1527.66
25	3523.69	503.38	783.04	640.67	1174.56	503.38	1006.77	1101.15	352.37	1761.85
30	4077.30	582.47	906.07	741.33	1359.10	582.47	1164.94	1274.16	407.73	2038.65
35	4252.31	607.47	944.96	773.15	1417.44	607.47	1214.95	1328.85	425.23	2126.16
40	4749.22	678.46	1055.38	863.49	1583.07	678.46	1356.92	1484.13	474.92	2374.61
45	5241.45	748.78	1164.77	952.99	1747.15	748.78	1497.56	1637.95	524.15	2620.73
50	5728.90	818.41	1273.09	1041.62	1909.63	818.41	1636.83	1790.28	572.89	2864.45
60	6348.93	906.99	1410.87	1154.35	2116.31	906.99	1813.98	1984.04	634.89	3174.47
70	7293.03	1041.86	1620.67	1326.01	2431.01	1041.86	2083.72	2279.07	729.30	3646.52
80	8238.28	1176.90	1830.73	1497.87	2746.09	1176.90	2353.79	2574.46	823.83	4119.14
90	9178.50	1311.21	2039.67	1668.82	3059.50	1311.21	2622.43	2868.28	917.85	4589.25
100	8923.67	1274.81	1983.04	1622.49	2974.56	1274.81	2549.62	2788.65	892.37	4461.84
125	10978.51	1568.36	2439.67	1996.09	3659.50	1568.36	3136.72	3430.78	1097.85	5489.26

Lead in km	Cost / trip	Cement stone block, GI CI CC AC Pipes below 120 mm dia	Tar bitumenn Asphalt roofing felt & Flooring Asphalt etc.	Steam coal	Matting thatching bambu ceiling board rubber PVC pipes fittings	Sheet & plate glass in packs Paints & Distempers AC Sheets & fittings iron fittings and iron sheets	Bricks modular bricks & Traditional bricks	Tiles half round tiles & Roofing tiles cement flooring tiles	Glass blocks (hollow) 200x200 x120 mm	Empty cement bags
1	2	3	4	5	6	7	8	9	10	11
	Pay load	7.0 Mt	4.5 MT	5.5 MT	3.0 MT	7.0 MT	3500 No.	3200 No.	1000 No.	2000 No.
		per 1 M.T.	**per 1 M.T.**	**per 1 M.T.**	**per 1 M.T.**	**per 1 M.T.**	**per 1000 Nos.**	**per 1000 Nos.**	**per 1000 Nos.**	**per 1000 Nos.**
150	12785.38	1826.48	2841.20	2324.61	4261.79	1826.48	3652.97	3995.43	1278.54	6392.69
175	14261.99	2037.43	3169.33	2593.09	4754.00	2037.43	4074.85	4456.87	1426.20	7131.00
200	15726.79	2246.68	3494.84	2859.42	5242.26	2246.68	4493.37	4914.62	1572.68	7863.40
250	18707.25	2672.46	4157.17	3401.32	6235.75	2672.46	5344.93	5846.02	1870.73	9353.63
300	21205.48	3029.35	4712.33	3855.54	7068.49	3029.35	6058.71	6626.71	2120.55	10602.74
420	28097.78	4013.97	6243.95	5108.69	9365.93	4013.97	8027.94	8780.56	2809.78	14048.89
540	35056.94	5008.13	7790.43	6373.99	11685.65	5008.13	10016.27	10955.29	3505.69	17528.47
660	42089.12	6012.73	9353.14	7652.57	14029.71	6012.73	12025.46	13152.85	4208.91	21044.56
780	49076.14	7010.88	10905.81	8922.93	16358.71	7010.88	14021.75	15336.29	4907.61	24538.07
900	55558.60	7936.94	12346.36	10101.56	18519.53	7936.94	15873.89	17362.06	5555.86	27779.30
1020	62923.41	8989.06	13982.98	11440.62	20974.47	8989.06	17978.12	19663.57	6292.34	31461.71
1140	70086.20	10012.31	15574.71	12742.95	23362.07	10012.31	20024.63	21901.94	7008.62	35043.10

STATEMENT IV

Including loading, unloading and stacking

Lead in km	Cost per trip	Cement pay load 9.00 MT	Steel pay load 9.00 MT	Bulk Asphalt in Bouzer pay load 4.50 MT	M.S.Bar 9.0 MT	Sand 5.75 cum
1	2	3	4	5	6	7
0.5	898.22	99.80	99.80	199.60	99.80	156.21
1.0	969.33	107.70	107.70	215.41	107.70	168.58
1.5	1038.81	115.42	115.42	230.85	115.42	180.66
2.0	1105.31	122.81	122.81	245.62	122.81	192.23
2.5	1174.11	130.46	130.46	260.91	130.46	204.19
3.0	1239.88	130.46	130.46	260.91	137.76	215.63
3.5	1305.17	145.02	145.02	290.04	145.02	226.99
4.0	1369.53	152.17	152.17	304.34	152.17	238.18
4.5	1432.46	159.16	159.16	318.32	159.16	249.12
5.0	1495.72	166.19	166.19	332.38	166.19	260.13
6.0	1622.24	180.25	180.25	360.50	180.25	282.13
7.0	1747.19	194.13	194.13	388.26	194.13	303.86
8.0	1875.02	208.34	208.34	416.67	208.34	326.09
9.0	1989.88	221.10	221.10	442.20	221.10	346.07
10	2103.03	233.67	233.67	467.34	233.67	365.74
15	2496.35	277.37	277.37	554.74	277.37	434.15
20	3055.32	339.48	339.48	678.96	339.48	531.36
25	3523.69	391.52	391.52	783.04	391.52	612.82
30	4077.30	453.03	453.03	906.07	453.03	709.10
35	4252.31	472.48	472.48	944.96	472.48	739.53
40	4749.22	527.69	527.69	1055.38	527.69	825.95
45	5241.45	582.38	582.38	1164.77	582.38	911.56
50	5728.90	636.54	636.54	1273.09	636.54	996.33
60	6348.93	705.44	705.44	1410.87	705.44	1104.16
70	7293.03	810.34	810.34	1620.67	810.34	1268.35
80	8238.28	915.36	915.36	1830.73	915.36	1432.74
90	9178.50	1019.83	1019.83	2039.67	1019.83	1596.26
100	8923.67	991.52	991.52	1983.04	991.52	1551.94
125	10978.51	1219.83	1219.83	2439.67	1219.83	1909.31
150	12785.38	1420.60	1420.60	2841.20	1420.60	2223.54
175	14261.99	1584.67	1584.67	3169.33	1584.67	2480.35
200	15726.79	1747.42	1747.42	3494.84	1747.42	2735.09
250	18707.25	2078.58	2078.58	4157.17	2078.58	3253.43
300	21205.48	2356.16	2356.16	4712.33	2356.16	3687.91
420	28097.78	3121.98	3121.98	6243.95	3121.98	4886.57
540	35056.94	3895.22	3895.22	7790.43	3895.22	6096.86
660	42089.12	4676.57	4676.57	9353.14	4676.57	7319.85
780	49076.14	5452.90	5452.90	10905.81	5452.90	8534.98
900	55558.60	6173.18	6173.18	12346.36	6173.18	9662.37
1020	62923.41	6991.49	6991.49	13982.98	6991.49	10943.20
1140	70086.20	7787.36	7787.36	15574.71	7787.36	12188.90

STATEMENT V

Excluding loading, unloading and stacking

Lead in km	Cost per trip	Cement pay load 9.00 MT	Steel pay load 9.00 MT	Bulk Asphalt in Bouzer pay load 4.50 MT
1	2	3	4	5
0.5	410.15	45.57	45.57	91.14
1.0	454.49	50.50	50.50	101.00
1.5	498.12	55.35	55.35	110.69
2.0	540.41	60.05	60.05	120.09
2.5	583.70	64.86	64.86	129.71
3.0	625.69	64.86	64.86	129.71
3.5	667.45	74.16	74.16	148.32
4.0	708.79	78.75	78.75	157.51
4.5	749.53	83.28	83.28	166.56
5.0	790.42	87.82	87.82	175.65
6.0	872.13	96.90	96.90	193.81
7.0	953.15	105.91	105.91	211.81
8.0	1035.45	115.05	115.05	230.10
9.0	1112.06	123.56	123.56	247.12
10	1187.89	131.99	131.99	263.98
15	1490.71	165.63	165.63	331.27
20	1866.84	207.43	207.43	414.85
25	2152.70	239.19	239.19	478.38
30	2519.63	279.96	279.96	559.92
35	2727.09	303.01	303.01	606.02
40	3070.08	341.12	341.12	682.24
45	3411.19	379.02	379.02	758.04
50	3750.23	416.69	416.69	833.38
55	3747.15	416.35	416.35	832.70
65	4378.15	486.46	486.46	972.92
75	5015.92	557.32	557.32	1114.65
85	5645.93	627.33	627.33	1254.65
95	5873.04	652.56	652.56	1305.12
105	6462.84	718.09	718.09	1436.19
130	7934.00	881.56	881.56	1763.11
155	9428.08	1047.56	1047.56	2095.13
180	10895.05	1210.56	1210.56	2421.12
230	13849.66	1538.85	1538.85	3077.70
280	16375.30	1819.48	1819.48	3638.96
400	23279.56	2586.62	2586.62	5173.24
520	30277.06	3364.12	3364.12	6728.24
640	37210.56	4134.51	4134.51	8269.01
760	44083.35	4898.15	4898.15	9796.30
880	50972.95	5663.66	5663.66	11327.32
1000	57664.50	6407.17	6407.17	12814.33
1120	64643.56	7182.62	7182.62	14365.24

STATEMENT SHOWING STANDARD WEIGHTS OF PIPES TO BE FOLLOWED FOR CARTING OF VARIOUS DIAMETERS AND TYPES OF PIPES

I) C.I.Pipes (IS:1536-1989)

Diameter of pipes in mm	Class of pipes and its weights in kg. per meter length		
	LA	A	B
80	16.00	17.38	18.46
100	19.82	21.82	23.27
125	25.82	28.18	30.36
150	32.10	35.27	38.00
200	47.09	51.09	55.27
250	63.45	69.09	74.73
300	81.82	89.45	96.91
350	103.09	111.82	121.27
400	125.45	137.09	140.00
450	151.27	166.10	179.27
500	177.09	192.91	208.73
600	236.00	257.64	335.01
700	304.55	335.73	359.45
750	341.09	372.91	404.55
800	381.00	416.00	450.00
900	465.09	507.45	549.80
1000	558.73	610.36	659.64

STATEMENT SHOWING THE TOTAL WEIGHTS OF VARIOUS DIA D.I.K-9 PIPES INCLUDING WEIGHT OF MORTER LINING PER LENGTH

II) D.I. PIPES

1) Barrel Mass as per IS : 8329-1994
2) Socket Mass as per IS : 8329-1994
3) Cement Mortar Lining Weights as per ISO : 4179-1985

Nominal dia meter	Weight / M Length of D.I. K-9 Pipes of			
	4M	5M	5.50M	6M
80 mm wt. of D.I. pipe / M	13.00	13.00	12.91	12.67
weight morter / m	1.56	1.56	1.56	1.56
Total wt. / M	14.56	14.56	10.47	14.23
100 mm wt. of D.I. pipe / M	16.25	16.00	16.00	15.86
weight morter / m	1.93	1.93	1.93	1.93
Total wt. / M	18.18	17.93	17.93	17.76
125 mm wt. of D.I. pipe / M	20.50	20.00	20.00	19.83
weight morter / m	2.45	2.42	2.42	2.42
Total wt. / M	22.92	22.42	22.42	22.25
150 mm wt. of D.I. pipe / M	24.75	24.20	24.18	24.00
weight morter / m	2.90	2.90	2.90	2.90
Total wt. / M	27.65	27.10	27.08	26.90
200 mm wt. of D.I. pipe / M	33.25	32.60	33.54	32.33
weight morter / m	3.88	3.88	3.88	3.88
Total wt. / M	37.13	36.48	36.42	36.21
250 mm wt. of D.I. pipe /	43.75	43.00	42.73	42.50
M weight morter / m	4.84	4.84	4.84	4.84
Total wt. / M	88.59	47.84	47.57	47.34
300 mm wt. of D.I. pipe / M	55.50	54.60	54.18	53.83
weight morter / m	5.80	5.80	5.80	5.80
Total wt. / M	61.30	60.40	59.98	59.63
350 mm wt. of D.I. pipe / M	69.25	68.00	67.45	67.17
weight morter / m	12.12	12.12	12.12	12.12
Total wt. / M	81.37	80.12	79.57	79.29
400 mm wt. of D.I. pipe / M	82.75	81.40	80.91	80.33
weight morter / m	13.82	13.82	13.82	13.82
Total wt. / M	96.57	95.22	94.73	94.15
450 mm wt. of D.I. pipe / M	98.75	97.00	96.36	95.83
weight morter / m	15.53	15.53	15.53	15.53
Total wt. / M	114.28	112.53	111.89	111.36
500 mm wt. of D.I. pipe / M	115.00	112.80	112.00	111.50
weight morter / m	17.26	17.26	17.26	17.26
Total wt. / M	132.26	130.06	129.26	128.76
600 mm wt. of D.I. pipe / M	152.00	149.00	147.82	147.00
weight morter / m	320.75	20.75	320.75	320.75
Total wt. / M	172.73	169.73	168.55	167.73
700 mm wt. of D.I. pipe / M	193.75	189.80	188.36	187.70
weight morter / m	29.45	29.45	29.45	29.45
Total wt. / M	223.20	219.25	217.81	217.25
750 mm wt. of D.I. pipe / M	217.50	213.00	211.45	210.00
weight morter / m	31.56	31.56	31.56	31.56
Total wt. / M	249.06	244.56	243.01	241.56

Nominal dia meter	Weight / M Length of D.I. K-9 Pipes of			
	4M	5M	5.50M	6M
800 mm wt. of D.I. pipe / M	240.75	235.80	233.82	232.33
weight morter / m	33.69	33.69	33.69	33.69
Total wt. / M	274.44	269.49	267.51	265.92
900 mm wt. of D.I. pipe / M	292.75	286.20	283.82	281.83
weight morter / m	37.89	37.89	37.89	37.89
Total wt. / M	330.64	324.09	321.71	319.72
1000 mm wt. of D.I. pipe / M	3495.75	341.60	338.55	336.17
weight morter / m	42.08	42.08	42.08	42.08
Total wt. / M	391.83	383.68	380.63	378.25

III) M.S. Pipes

Note: Weight of M.S. pipes is to be computed by considering density of steel as 7850 kg/cum considering the diameter and thickness of plate used for manufacturing of M.S. pipes

IV) P.V.C. Pipes (IS:4985-1988)

Diameter of pipe in mm	Class of pipes and its weights in kg per meter length		
	4.00 sq.cm	6.00 sq.cm	10.00 sq.cm
63	0.47	0.67	1.01
75	0.67	0.93	1.44
90	0.92	1.33	2.05
110	1.32	1.89	3.08
140	2.13	3.10	4.99
160	2.78	3.92	6.56
180	3.56	5.07	8.10
200	4.26	7.00	10.20
225	5.48	7.84	12.56
250	6.63	10.19	15.31
280	8.34	12.16	19.80
315	10.55	15.37	25.00

V) R.C.C. Pipes

Diameter of pipe in mm	Class of pipes and its weights in kg per meter length					
	P-1	P-2	P-3	NP-2	NP-3	NP-4
100	23.56	23.56	23.56	21.20	21.20	21.20
150	33.00	33.00	33.00	29.40	29.40	29.40
200	42.10	42.10	42.10	37.90	37.90	37.90
250	51.84	63.40	75.18	57.10	67.60	77.20
300	74.64	102.50	117.10	92.25	105.40	119.10
350	92.28	134.30	168.10	120.80	151.30	170.20
400	104.16	169.60	208.10	152.60	187.30	212.40
450	127.92	188.70	235.23	169.90	211.70	240.80
500	141.36	229.90	261.37	206.90	235.23	270.50
600	192.96	305.70	313.64	275.10	282.27	320.20
700	225.59	325.80	365.92	293.20	329.32	370.90
800	257.82	345.19	418.19	310.60	376.30	425.40
900	290.00	389.58	470.47	350.60	423.00	482.30
1000	322.28	443.98	510.00	399.80	459.00	531.40

VI) P.S.C. Pipes of all classes and B.W.S.C. Pipes of all classes

Diameter of pipes in mm	Weight of pipe per meter length for all classes
350	197.50 kg/km
400	240.00 kg/km
450	257.50 kg/km
500	292.50 kg/km
600	375.00 kg/km
700	432.50 kg/km
800	582.50 kg/km
900	705.00 kg/km
1000	825.00 kg/km
1100	947.50 kg/km
1200	1115.00 kg/km
1300	1190.00 kg/km
1400	1370.00 kg/km
1500	1560.00 kg/km
1600	1767.50 kg/km
1700	1987.50 kg/km
1800	2205.50 kg/km

VII) G.I. Pipes

Diameter of pipes in mm	Class of pipes and its weights in kg per meter length		
	Light (Yellow)	Medium (Blue)	Heavy (Red)
15	0.96	1.23	1.46
20	1.42	1.59	1.91
25	2.03	2.40	2.99
32	2.61	3.17	3.97
40	3.29	3.65	4.47
50	4.18	5.16	6.24
65	5.92	6.63	8.02
80	6.98	8.64	10.30
100	10.20	12.40	14.70
125	--	16.70	18.30
150	--	19.70	21.80

IV) A.C. Pressure Pipes (ISO-160)

Diameter of pipes in mm	Class of pipes and its weights in kg per meter length			
	Class 5	Class 10	Class 15	Class 20
80	6.00	6.20	6.40	6.80
100	7.60	7.70	8.20	10.30
125	9.57	9.80	11.00	13.30
150	11.87	12.20	15.30	19.00
200	15.57	19.30	25.60	32.70
250	19.25	25.20	32.70	41.50
300	24.97	32.30	45.10	58.10
350	39.77	47.52	55.27	71.42
400	49.20	60.20	71.36	93.10
450	56.92	70.27	83.63	111.37
500	72.84	89.54	104.25	136.52
600	102.50	137.32	148.35	193.16

VIII) Stoneware Pipes

Diameter of pipes in mm	Weight of 0.60 M long pipe in kg per pipe
100	8.70 kg/each
150	15.00 kg/each
200	20.85 kg/each
225	23.70 kg/each
250	27.57 kg/each
300	43.60 kg/each

SECTION-D- CEMENT CONSUMPTION

STANDARD CEMENT CONSUMPTION TO BE FOLLOWED FOR VARIOUS ITEMS OF

Sr. No.	Item of Works	Unit	Standard Cement Consumption
A.	**P.C.C. & R.C.C. Works**		
	1:½:1 (M-300) with finishing in CM 1:3 proportion	Cum	9.20 bags
	1:½:2 (M-250) with finishing in CM 1:3 proportion	Cum	8.50 bags
	1:1½:3 (M-200) with finishing in CM 1:3 proportion	Cum	6.90 bags
	1:1½:3 (M-200) without finishing	Cum	6.80 bags
	1:2:4 (M-150) without finishing in CM 1:3 proportion	Cum	5.90 bags
	1:2:4 (M-150) without finishing	Cum	5.80 bags
B.	**Brick Masonry Works**		
	B.B. Masonry - IInd sort in CM 1:6 proportion	Cum	1.44 bags
	B.B. Masonry - IInd sort in CM 1:5 proportion	Cum	1.62 bags
	B.B. Masonry - IInd sort in CM 1:4 proportion	Cum	2.30 bags
	Half brick walls in CM 1:4 proportion	Cum	0.22 bags
C.	**Half brick walls in CM 1:4 proportion**		
	Stone Masonry Works		
	U.C.R. Masonry - IInd sort in CM 1:6 proportion	Cum	1.77 bags
	U.C.R. Masonry - IInd sort in CM 1:4 proportion	Cum	2.65 bags
	Ramdom Rubble Masonry - IInd sort in CM 1:6 proportion	Cum	1.77 bags
	Ramdom Rubble Masonry - IInd sort in CM 1:4 proportion	Cum	2.65 bags
	C.R. Masonry - IInd sort in CM 1:4 proportion	Cum	2.45 bags
	C.R. Masonry - IInd sort in CM 1:6 proportion	Cum	1.50 bags

Sr. No.	Item of Works	Unit	Standard Cement Consumption
D.	**Water Proofing Works**		
1	Damp-proof course 50 mm thick in 1:2:4 proportion with bituman layer W.P. compound	Sqm.	0.35 bags
	Integral finishing to newly laid slab in CM 1:3 proportion with W.P. Compound	Sqm.	0.06 bags
	Water Proofing treatment over old slab with W.P. cement slurry as tack coat 12 mm thick, W.P. plaster in CM 1:3 proportion, brick bat coba average 9.50 cm thick in CM 1:6 proportion and 20 mm thick W.P. cement plaster over it in CM 1:3 proportion and finishing with cement slurry with novelling	Sqm.	0.37 bags
E.	**Plastering and Pointing Works**		
	i) 12 mm thick plaster		
	CM 1:2 proportion	Sqm.	0.16 bags
	CM 1:3 proportion	Sqm.	0.12 bags
	CM 1:4 proportion	Sqm.	0.10 bags
	ii) 20 mm thick plaster		
	CM 1:2 proportion	Sqm.	0.27 bags
	CM 1:3 proportion	Sqm.	0.19 bags
	CM 1:4 proportion	Sqm.	0.15 bags
	iii) 25 mm thick plaster		
	CM 1:2 proportion	Sqm.	0.34 bags
	CM 1:3 proportion	Sqm.	0.25 bags
	CM 1:4 proportion	Sqm.	0.19 bags
	iv) Cement pointing in CM 1:3 proportion	Sqm.	0.03 bags
	v) Tuck cement pointing in CM 1:3 proportion	Sqm.	0.05 bags
	vi) Sand faced plaster in CM 1:4 proportion including base coat 15 mm thick in CM 1:4 proportion with W.P. compound	Sqm.	0.22 bags
	vii) Rough cast cement plaster in CM1:4 proportion in two coats.	Sqm.	0.22 bags
F.	**Flooring Works**		
	i) I.P.S. flooring - 40 mm thick	Sqm.	0.30 bags
	i) I.P.S. flooring - 50 mm thick	Sqm.	0.37 bags
	i) Rough Shahabad - any other similar flooring in CM 1:4 proportion bedding	Sqm.	0.15 bags
	iv) All types of cement / kadappa / polished / mosaic tiles flooring or skirting / dado set on CM 1:4 proportion bedding	Sqm.	0.18 bags
	v) Glazed / Ceramic tiles flooring or skirting / dado fixed with plain cement slurry	Sqm.	0.22 bags

Section - E- Excavation				
Sr No	**Item Description**	**Unit**	**Rate (in Rs.) 2019-2020**	**LABOUR INVOLVED**
1	Excavation for foundation / pipe trenches in **earth, soils of all types, sand, gravel and soft murum,** including removing the excavated material upto a distance of 50 metres and lifts as below, stacking and spreading as directed, manual dewatering, preparing the bed for foundation and excluding backfilling, etc. complete.			
	(Bd-A-1/259)			
	Lift 0 to 1.5 M	Cum	**140.00**	**139.00**
2	Excavation for foundation / pipe trenches in **hard murum** including removing the excavated material upto a distace of 50 M and lifts as below, stacking and spreading as directed by Engineer-in-charge, normal dewatering, preparing the bed for foundation and excluding backfilling, etc. complete.			
	(Bd-A2/259)			
	Lift 0 to 1.5 M	Cum	**157.00**	**156.00**
3	Excavation for foundation / pipe trenches in **hard murum and boulders,** W.B.M. road including removing the excavated material upto a distance of 50 M beyond the area and lifts as below, stacking and spreading as directed by Engineer-in-charge, normal dewatreing, preparing the bed for foundation and excluding backfilling, etc. complete.			
	(Bd-A-3/259)			
	Lift 0 to 1.5 M	Cum	**175.00**	**172.00**
4	Add for **every additional lift of 1.5 M** beyond initial lift of 1.5 M for Item Nos. 1 to 3	Cum	**13.00**	**13.00**
5	Excavation for foundation / pipe trenches in **soft rock and old cement and lime masonry** foundation asphalt road by all means including removing the excavated material upto a distance of 50 M beyond area and lifts as below, stacking as directed by Engineer-in-charge, normal dewatering, preparing the bed for foundation and excluding backfilling, etc. complete.			
	(Bd-A-4/259)			
	Lift 0 to 1.5 M	Cum	**513.00**	**454.00**

Sr No	Item Description	Unit	Rate (in Rs.) 2019-2020	LABOUR INVOLVED
6	Excavation for foundation / pipe trenches in **hard rock by controlled blasting,** including trimming and levelling the bed by chiselling where necessary and removing the excavated material and stacking it in measurable heaps within a distance of 50 metres from the area and lifts as below, normal dewatering, excluding backfilling, etc. complete.			
	(Bd-A-5/259)			
	Lift 0 to 1.5 M	Cum	**684.00**	**573.00**
7	Excavation for foundation / pipe trenches in **hard rock and concrete road by chiselling,** wedging, line drilling, by mechanical means or by all means other than blasting including trimming and levelling the bed, removing the excavated material upto a distance of 50 metres beyond the area and lifts as below, stacking as directed by Engineer-in-charge, normal dewatering, excluding backfilling, etc. complete by all means.			
	(Bd-A-1/259)			
	Lift 0 to 1.50 M	Cum	**957.00**	**946.00**
8	Excavation for foundation /pipe trenches in **Slush Muddy/ Marshy /Slushy /Soil** including use of poclain, labour for dewatering during execution including removing the excavated material upto a distance of 50 metres and lifts as below, stacking and spreading as directed, preparing the bed by cleaning the mud, labour required for execution for shutterng item but excluding back filling etc. complete. Providing and fixing shuttering shall be paid separately.			
	Lift 0 to 1.5 M	Cum	**344.00**	**202.00**
9	Add for **every additional lift of 1.5 M** beyond initial lift of 1.5 M for Item Nos 5 to 9	Cum	**24.00**	**24.00**

Sr No	Item Description	Unit	Rate (in Rs.) 2019-2020	LABOUR INVOLVED
	HEAD WORKS			
10	Excavation in general in soft material **comprising of soft soil, soft murum, sand, hard murum with boulders** in wet or dry condition for Head Works i.e. Intake Well, Connecting Pipe, Jack Well, Pump House, Supply Well, etc. for lift 0 to 1.5 M and lead of 150 M including baricating, guarding, disposing off surplus excavated stuff within a radius of 0.5 km. as directed by Engineer-in- charge, etc. complete excluding refilling.			
a)	For Head Works on **river or dam submergence** for initial lift of 0 to 1.5 M	Cum	**422.00**	**416.00**
b)	For Head works on **nalla or any other site** suggested by GSDA for initial Lift of 0 to 1.5M	Cum	**295.00**	**292.00**
c)	Add for every **additional lift of 1.5 M** beyond initial lift of 1.5 M	Cum	**25.00**	**25.00**
11	Excavation in general in hard material comprising of **soft rock, hard rock, Manjara rock** etc, by blasting / controlled blasting, chiselling as required in wet or dry condition for Head Works i.e. Intake Well, Connecting Pipe, Jack Well, Pump House, supply Well, etc. for lift 0 to 1.5 M and lead of 150 M including baricading, guarding, disposing off surplus excavated stuff within a radius of 0.5 km. as directed by Engineer-in-charge, excluding refilling.			
a)	For Head Works on **river or dam sub mergence** for initial lift of 0 to 1.5 M	Cum	**903.00**	**706.00**
b)	For Head Works on **nalla or any other site** suggested by GSDA for initial lift of 0 to 1.5 M	Cum	**623.00**	**454.00**
c)	Add for each **additional lift to 1.5 M** beyond initial lift of 1.5 M	Cum	**25.00**	**25.00**
12	Excavation in general in soft material **comprising of soft soil, soft murum, sand, hard murum** with boulders in wet or dry condition for Head Works and allied works by well sinking process for average depth of 12 M and lead of 150 M including shoring, barricading, guarding, refilling, disposing of surplus excavated stuff as directed by Engineer-in-charge, etc. complete.			
a)	Diameter **upto and including 3 M**	Cum	**812.00**	**772.00**
b)	Diameter **more than 3 M**	Cum	**684.00**	**648.00**

Sr No	Item Description	Unit	Rate (in Rs.) 2019-2020	LABOUR INVOLVED
13	**Desilting** the Supply Well, Intake Well / Head Works, sump of water supply/ sewerage works etc. in wet or dry condition including lifts **upto 10.5 M** and lead upto 150 M as required beyond the work site, stacking, spreading, including necessary guarding, etc. complete, as directed by Engineer-in-charge.	Cum	**703.00**	**666.00**
	Add for every **additional lift of 1.5 M beyond initial lift of 10.50 M**	Cum	**23.00**	**23.00**
14	**Dewatering** the excavated trenches and pools of water in the building trenches / pipeline trenches, well works by using pumps and other devices including disposing off water to safe distance as directed by Engineer-in-charge (including cost of machinery, labour, fuel), etc. complete.	Bhp/Hr	**70.00**	**12.00**
	i) The contractor at his request may allowed to start construction of masonary steining so as not to allow silting of well in oncoming mansoon and while paying masonary, 25% amount shall be withheld and released only when excavation to the full depth is completed.			
	ii) Dewatering : Total dewatering charges are to be proposed in tender as lumpsum amount and 75% is payable for excavation and 25% is payable for construction of well / gallery. Out of 75% excavation breakup shall be as under			
	25% for last 1 Mtr. Depth. 20% for 2 M depth which just above last 1 M depth. 15% for 2 M depth which just above last 3 M depth. 15% for the rest of depth from water table level			
	The above conditions will restrict the tendancy of agencies to avoid deeping of wells etc. to the required depths.			
15	**Refilling** the trenches with available excavated stuff with soft material first over pipeline and then hard material in 15 cm layers with all leads and lifts including consolidation, surcharging, etc. complete.	Cum	**72.00**	**69.00**

Sr No	Item Description	Unit	Rate (in Rs.) 2019-2020	LABOUR INVOLVED
16	**Filling** in plinth and floors murum bedding in trenches **with approved murum from excavated materials** from foundation 15 cm to 20cm layers including watering and compaction complete.	Cum	**72.00**	**69.00**
17	**Filling** in plinth and floors / trenches with **contractor's murum** for bedding in 15cm to 20cm layers including watering and compaction complete.	Cum	**701.00**	**77.00**
18	Providing dry trap / granite / quartzite / gneiss, **rubble stone soling** in 15cm to 20 cm thick layers (including hand packing and compacting), etc. complete.	Cum	**993.00**	**220.00**
19	Providing and filling in **sand boxing** in pipeline or for foundation with sand of approved quality including watering compaction, etc. complete.	Cum	**1016.00**	**169.00**
20	**Open timbering** in trenches of depth more than 1.5 m for shoring and strutting including use of and waste of all necessary timber works including walling, strutts, open polling boards/ horizontal sheeting, runners, etc. as may be necessary and fixing and removal complete. (Measurements to be taken of the face/area timbered)(NBO Item No. 4-15 page No.59)			
a)	Lift 0 to 1.5 M [for non-water logged area]	Sqm	**179.00**	**5.00**
	Additional per Sqm. for further lifts of 1.5M each.	Sqm	**33.00**	**14.00**
b)	Lift for 0 to 1.5 M [For water logged area.]	Sqm	**193.00**	**19.00**
	Additional per Sqm. for further lifts of 1.5M each	Sqm	**32.00**	**11.00**
	Note:- For the trenches with more than 1.5 M depth shoring if required from G.L. is to be done and is payable from GL.			

Section - F- Iron And Structural Steel Work.

Sr No	Item Description	Unit	Rate (in Rs.) 2019-2020	LABOUR INVOLVED
1	Providing and fixing **mild steel grill** work for windows/ventilators of 20 Kg./Sqm. as per drawings including necessary welding and painting with one coat of anticorrosive paint and two coats of oil painting, etc. complete.			
	(Bd-U-1/537)	Sqm	**1634.00**	**153.00**
2	Providing and fixing **mild steel grill** railing of 20 Kg./Sqm. with teak wood hand railing, still and newel posts for staircase and including fabricating, fixtures, erecting, painting the grill work with approved oil paint and polishing the hand rail and newel posts with French polish two coats, etc. complete.			
	(Bd-U-2 /537)	Sqm	**2431.00**	**396.00**
3	Providing **structural steel work in rolled stanchions fixed with connecting plates** or angle cleats as in main and cross beams, hip and jack rafters, purlins connecting to truss members and like as per detailed **desings and drawings** or as directed by Engineer-in-charge including cutting, fabricating, hoisting, erecting, fixing in position, making riveted / bolted /welded connections and one coat of anticorrosive paints and over it two coats of oil painting, etc. complete.			
	(Bd-C-3 /275)	M.T	**64460.00**	**10293.00**
4	Providing **stuctural steel work in single stanchions composed of RSJ, channel,** etc, with caps, bases, mild steel plates, angles, brackets, cleats, gusset plates, anchor bolts, etc. as per detailed design and drawing or as directed by Engineer-in-charge including cutting, fabrication, hoisting, erecting, fixing in position, making riveted/ bolted / welded connections and one coats of anticorrosive paint and over it two coats of oil painting, etc. complete.			
	(Bd-C-6 /277)	M.T	**63225.00**	**9577.00**
5	Providing **structural steel work in rolled sections like joists, channels, angles, tees,** etc. as per detailed designs and drawings including fixing in position without connecting plates, braces, etc. and one coat of anticorrosive paint and over it two coats of oil painting, of approved quality and shade, etc. complete.			
	(Bd-C-2 /275)	M.T	**66095.00**	**10948.00**

Sr No	Item Description	Unit	Rate (in Rs.) 2019-2020	LABOUR INVOLVED
6	Providing **structural steel work in trusses, other similar trussed purlins and members with all bracing, gusset plates,** etc. as per detailed design and drawing or as directed by Engineer-in-charge including cutting, fabricating, hoisting, erecting and fixing in position, making reveted / bolted / welded connections and one coat of anticorrosive paint and over it two coat of oil painting, etc. complete.			
	(Bd-C-8 /278)	M.T	**85140.00**	**24769.00**

Section - G- Plain and Reinforced Cement Concrete				
Sr No	**Item Description**	**Unit**	**Rate (in Rs.) 2019-20**	**LABOUR INVOLVED**
1	Providing and laying in situ following grades of **Plain Cement concrete** of trap/ granite/ quartzite/ gneiss metal for **foundation and bedding** including normal dewatering, form work, compaction and curing, etc, complete. Use of L & T, A.C.C., Ambuja, Birla Gold, Manikgad, Rajashree, etc. cement is permitted.)			
	(Bd-E-1 /287)			
a	In PCC M-100	Cum	**4262.00**	**1396.00**
b	In PCC M-150	Cum	**4647.00**	**1393.00**
2	Providing and laying in situ Cement concrete of trap/granite/quartzite/ gneiss metal for RCC work in **foundation like raft, grillage, strip** foundation and footing of RCC columns and steel stanchions including normal dewatering, 'plywood form work, bully/steel propups, compaction, finishing and curing, etc, complete. (By weigh batching and mix design for M-250 and M-300 only. Use of L & T, A.C.C., Ambuja, Birla Gold, Manikgad, Rajashree, etc. cement is permitted.) (excluding M.S. or Tor reinforcement)			
	For Foundations			
a	In RCC M-150	Cum	**5497.00**	**1674.00**
b	In RCC M-200	Cum	**5551.00**	**1665.00**
c	In RCC M-250	Cum	**6024.00**	**1668.00**
d	In RCC M-300	Cum	**6230.00**	**1669.00**
3	Providing and casting in situ Cement Concrete of trap/granite/quartzite/ gneiss metal of approved quality **for RCC work** as per detailed drawings and designs or as directed by Engineer-in-charge including normal dewatering, centering, 'plywood formwork, bully/steel prop-ups, compaction, finishing the formed surfaces with CM 1:3 of sufficient minimum thickness if special finish is to be provided and curing, etc. complete. (By weigh batching and mix design for M-250 and M-300 only. Use of L&T, A.C. C., Ambuja, Birla Gold, Manikgad, Rajashree, etc. cement is permitted) (excluding M.S, or Tor reinforcement)			
	For all types of columns			
a	For RCC M-150 grade	Cum	**6552.00**	**1670.00**
b	For RCC M-200 grade	Cum	**6773.00**	**1665.00**
c	For RCC M-250 grade	Cum	**7245.00**	**1668.00**
d	For RCC M-300 grade	Cum	**7452.00**	**1669.00**

Sr No	Item Description	Unit	Rate (in Rs.) 2019-20	LABOUR INVOLVED
4	Providing and casting in situ Cement Concrete of trap/granite/quartzite/ gneiss metal of approved quality **for RCC work** as per detailed drawings and designs or as directed by Engineer-in-charge including normal dewatering, centering, 'plywood formwork, bully/steel prop-ups, compaction, finishing the formed surfaces with CM 1:3 of sufficient minimum thickness if special finish is to be provided and curing, etc. complete. (By weigh batching and mix design for M-250 and M-300 only. Use of L&T, A.C. C., Ambuja, Birla Gold, Manikgad, Rajashree, etc. cement is permitted) (excluding M.S, or Tor reinforcement)			
	For Beams/Braces/Lintels			
a	For RCC M-150 grade	Cum	**6435.00**	**1670.00**
b	For RCC M-200 grade	Cum	**6683.00**	**1665.00**
c	For RCC M-250 grade	Cum	**7128.00**	**1668.00**
d	For RCC M-300 grade	Cum	**7335.00**	**1669.00**
5	Providing and casting in situ Cement Concrete of trap/granite/quartzite/ gneiss metal of approved quality for **RCC work** as per detailed drawings and designs or as directed by Engineer-in-charge including normal dewatering, centering, 'plywood formwork, bully/steel prop-ups, compaction, finishing the formed surfaces with CM 1:3 of sufficient minimum thickness if special finish is to be provided and curing, etc. complete. (By weigh batching and mix design for M-250 and M-300 only. Use of L&T, A.C. C., Ambuja, Birla Gold, Manikgad, Rajashree, etc. cement is permitted) (excluding M.S, or Tor reinforcement)			
	For Slabs / Landings / Vertical Walls / Waist Slabs / Steps for Staircase			
a	For RCC M-150 grade	Cum	**6857.00**	**1620.00**
b	For RCC M-200 grade	Cum	**7220.00**	**1665.00**
c	For RCC M-250 grade	Cum	**7692.00**	**1668.00**
d	For RCC M-300 grade	Cum	**7899.00**	**1669.00**

Sr No	Item Description	Unit	Rate (in Rs.) 2019-20	LABOUR INVOLVED
6	Providing and casting in situ Cement Concrete of trap/granite/quartzite/ gneiss metal of approved quality for **RCC work** as per detailed drawings and designs or as directed by Engineer-in-charge including normal dewatering, centering, 'plywood formwork, bully/steel prop-ups, compaction, finishing the formed surfaces with CM 1:3 of sufficient minimum thickness if special finish is to be provided and curing, etc. complete. (By weigh batching and mix design for M-250 and M-300 only. Use of L&T, A.C. C., Ambuja, Birla Gold, Manikgad, Rajashree, etc. cement is permitted) (excluding M.S, or Tor reinforcement)			
	For Chajjas / Parapets / Curtain Walls / Partition Walls / Pardies			
a	For RCC M-150 grade	Cum	**6962.00**	**1670.00**
b	For RCC M-200 grade	Cum	**7183.00**	**1665.00**
c	For RCC M-250 grade	Cum	**7656.00**	**1668.00**
d	For RCC M-300 grade	Cum	**7862.00**	**1669.00**
7	Providing and casting in situ Cement Concrete of trap/granite/quartzite/ gneiss metal of approved quality for RCC work as per detailed drawings and designs or as directed by Engineer-in-charge including normal dewatering, centering, 'plywood formwork, bully/steel prop-ups, compaction, finishing the formed surfaces with CM 1:3 of sufficient minimum thickness if special finish is to be provided and curing, etc. complete. (By weigh batching and mix design for M-250 and M-300 only. Use of L&T, A.C. C., Ambuja, Birla Gold, Manikgad, Rajashree, etc. cement is permitted) (excluding M.S, or Tor reinforcement)			
	For Domes			
a	For RCC M-150 grade	Cum	**7271.00**	**1670.00**
b	For RCC M-200 grade	Cum	**7492.00**	**1665.00**
	For Bottom Domes only			
c	For RCC M-250 grade	Cum	**7965.00**	**1668.00**
d	For RCC M-300 grade	Cum	**8171.00**	**1669.00**

Sr No	Item Description	Unit	Rate (in Rs.) 2019-20	LABOUR INVOLVED
8	Providing and fixing in position **steel bar reinforcement** of various diameters for RCC piles, caps, footings, foundations, slabs, beams, columns, canopies, staircases. newels, chajjas, lintels, pardies, copings, fins, arches, etc. as per detailed designs, drawings and schedules; including cutting, bending, hooking the bars, binding with wires or tack welding and supporting as required, etc. complete. (including cost of binding wire).			
a	Mild Steel	M.T.	**53794.00**	**9382.00**
b	Tor Steel	M.T.	**53794.00**	**9382.00**
c	Corrosion Resistant steel (Fe 500)	M.T.	**57884.00**	**11738.00**
9	Providing **fusion bonded epoxy coating** to reinforcement bars as per IS-13620-1993 specificaion for a thickness of 175 (+50) microns including extra cost on account of careful handling, extra cost on account of using PVC coated binding wire instead of G. I. wire, extra cost on account of touch-up material supplied by coating agency and repair work extra cost on account of transportation , loading, unloading, including all taxes (Central and Local), etc. complete.			
(a)	For reinforcement Diameterwise rates.			
1	8 mm dia.	M.T.	**17529.00**	
2	10 mm dia.	M.T.	**15465.00**	
3	12 mm dia.	M.T.	**14111.00**	
4	16 mm dia.	M.T.	**13595.00**	
5	20 mm dia.	M.T.	**12497.00**	
6	25 mm dia.	M.T.	**11336.00**	
7	28 mm dia.	M.T.	**10820.00**	
8	32 mm dia.	M.T.	**10045.00**	
(b)	Average rates (for estimation only)			
1	For 8mm to 20mm dia	M.T.	**14639.00**	
2	For above 20mm dia	M.T.	**10733.00**	

Sr No	Item Description	Unit	Rate (in Rs.) 2019-20	LABOUR INVOLVED
	Notes for Estimations			
1	All the rates of Reinforced Cement Concrete Items From 2 to 7 shall be **increased by 10%** for each brace height above 1st brace for R.C.C. E. S. R.s.e.g. For a R.C.C. E.S. R. with 7 M staging and first brace at 3.50 M above ground, the concrete in columns above first brace, concrete of ring beam and bottom slab is entitled for 10% increase, concrete of vertical wall, roof slab and roof beams, columns in container are entitled for 20% increase.			
2	All the rates of Reinforced Cement Concete Items from 2 to 7 shall be **increased by 2%** for every floor height above ground floor for building works.			
3	These rates are applicable for R. C. C. well works also.These rates shall be **increased by 10%** for every 5 M depth below initial 5 M depth.			
4	Rates for Item Nos. 8 and 9 shall be **increased by 5%** for each brace height above first brace for R.C.C. E.S.Rs. By 5% for every 5 m depth below initial 5 m depth for R. C. C. wells. By 1% building works for every floor height.			
5	Volumetric mix as per 1:1.5:3 shall be adopted with 56.5 kg. of cement for RCC-250 and 59.5 kg. of cement for RCC- 300, per load of mixer of 1bag capacity.			
6	Fusion bonded epoxy coating to be proposed only in Coastal Area with prior approval of the Chief Engineer.			
7	For estimation purpose,average rates as per item no. 8 b shall be considered wherever necessary.			

Sr No	Item Description	Unit	Rate (in Rs.) 2019-20	LABOUR INVOLVED
	READY MIX CONCRETE			
10	Providing and laying in situ **Ready Mix** Cement Concrete grade of trap/ granite/ quartzite/ gneiss metal for **RCC work in foundation** like raft, grillage, strip foundation and footing of RCC column and steel stanchions including normal dewatering, form work, compaction, finishing and curing including transporting from mixing plant upto distance of 25 km., pouring the concrete at work site for 1.5 M lift above G. L. and 5.0 M lift below G. L., etc. complete. (Excluding reinforcement and structural steel)			
	a) In RCC M-200	Cum	**5480.00**	**838.00**
	b) In RCC M-250	Cum	**5997.00**	**889.00**
	c) In RCC M-300	Cum	**6090.00**	**895.00**
11	Providing and casting in situ **Ready Mix** Cement Concrete grade of trap/ granite/ quartzite/ gneiss metal of approved quality for **RCC work** as per detailed drawings and designs or as directed by Engineer-in-charge including normal dewatering centering, form work, compaction, finishing the formed surfaces with CM 1:3 of sufficient minimum thickness to give a smooth and even surface wherever necessary or roughening if special finish is to be provided and curing including transporting from mixing plant upto distance of 25 km., pouring the concrete at work site for 1.5 M lift above G. L. and 5.0 M lift below G. L., etc. complete.			
	(Excluding reinforcement and structural steel)			
	For all types of columns			
	a) In RCC M-200 - all types of columns	Cum	**6956.00**	**3204.00**
	b) In RCC M-250 - all types of columns	Cum	**7338.00**	**3233.00**
	c) In RCC M-300 - all types of columns	Cum	**7347.00**	**3170.00**

Sr No	Item Description	Unit	Rate (in Rs.) 2019-20	LABOUR INVOLVED
12	Providing and casting in situ **Ready Mix** Cement Concrete grade of trap/ granite/ quartzite/ gneiss metal of approved quality for **RCC work** as per detailed drawings and designs or as directed by Engineer-in-charge including normal dewatering, centering, form work compaction, finishing the formed surfaces with CM 1:3 of sufficient minimum thickness to give a smooth and even surface wherever nesessary or roughening if special finish is to be provided and curing including transporting from mixing plant upto distance of 25 km., pouring the concrete at work site for 1.5 M lift above G. L. and 5.0 M lift below G. L., etc. complete.			
	(Excluding reinforcement and structural steel)			
	For Beams / Braces / Lintels			
	a) In RCC M-200	Cum	**6944.00**	**2787.00**
	b) In RCC M-250	Cum	**7525.00**	**2929.00**
	c) In RCC M-300	Cum	**7539.00**	**2860.00**
13	Providing and casting in situ **Ready Mix** Cement Concrete grade of trap/ granite/ quartzite/ gneiss metal of approved quality for **RCC work** as per detailed drawings and designs or as directed by Engineer-in-charge including normal dewatering centering, form work, compaction, finishing the formed surfaces with CM 1:3 of sufficient minimum thickness to give a smooth and even surface wherever necessary or roughening if special finish is to be provided and curing including transporting from mixing plant upto distance of 30 km., pouring the concrete at work site for 1.5 M lift above G. L. and 5.0 M lift below G. L., etc. complete.			
	(Excluding reinforcement and structural steel)			
	For Slabs / Landings / Vertical Walls / Waist Slabs / Steps for Staircase			
	a) In RCC M-200	Cum	**7221.00**	**3701.00**
	b) In RCC M-250	Cum	**7818.00**	**3904.00**
	c) In RCC M-300	Cum	**7827.00**	**3845.00**

Sr No	Item Description	Unit	Rate (in Rs.) 2019-20	LABOUR INVOLVED
14	Providing and casting in situ **Ready Mix** Cement Concrete grade of trap/ granite/ quartzite/ gneiss metal of approved quality for **RCC work** as per detailed drawings and designs or as directed by Engineer-in-charge including normal dewatering, centering, form work compaction, finishing the formed surfaces with CM 1:3 of sufficient minimum thickness to give a smooth and even surface wherever nesessary or roughening if special finish is to be provided and curing including transporting from mixing plant upto distance of 25 km., pouring the concrete at work site for 1.5 M lift above G. L. and 5.0 M lift below G. L., etc. complete.			
	(Excluding reinforcement and structural steel)			
	For Chajjas / Parapets / Curtain Walls / Partition Walls / Pardies			
	a) For RCC M-200	Cum	**7505.00**	**3680.00**
	b) For RCC M-250	Cum	**8107.00**	**3870.00**
	c) For RCC M-300	Cum	**8194.00**	**3880.00**
15	Providing and casting in situ **Ready Mix** Cement Concrete grade of trap/ granite/ quartzite/ gneiss metal of approved quality for **RCC work** as per detailed drawings and designs or as directed by Engineer-in-charge including normal dewatering, centering, form work compaction, finishing the formed surfaces with CM 1:3 of sufficient minimum thickness to give a smooth and even surface wherever nesessary or roughening if special finish is to be provided and curing including transporting from mixing plant upto distance of 25 km., pouring the concrete at work site for 1.5 M lift above G. L. and 5.0 M lift below G. L., etc. complete.			
	(Excluding reinforcement and structural steel)			
	For Domes			
	a) For RCC M-200	Cum	**7771.00**	**4219.00**
	b) For RCC M-250	Cum	**8371.00**	**4440.00**
	c) For RCC M-300	Cum	**8382.00**	**4376.00**
	Note : 1) Add Rs.10/- per Cum for transportation beyond 25 km. for every additional lead of 1 km.			
	2) Beyond 1.5 M above G.L. and 5.0 M below G. L., concreting is to be done by pumping by the Company.			
	3) Additional rate of pumping			
	a) Static pump Rs. 175/- per Cum			
	b) Mobile pump Rs. 250/- per Cum			
	4) For Ready Mix Concrete, prior permission from Chief Engineer shall be obtained.			

Section - H- Miscellaneous Works				
Sr No	**Item Description**	**Unit**	**Rate (in Rs.) 2019-20**	**LABOUR INVOLVED**
1	Providing and fixing **G.I. pipe railing having 1.0 M height** consisting 50 x 50 x 6 mm thick M. S. angles as verticals at 1.5 M c/c, and additional posts at every corner with 3 rows of 25 mm dia G.I. pipes of medium class variety as horizontal and painting 3 coats of oil paint over 1 coat of anticorrosive paint of approved colour and shade including cost of all labour, transporting bends to curved shape, etc. complete.	Rmt	**873.00**	**46.00**
1A	As above but **with only 2 rows**	Rmt	**639.00**	**27.00**
2	**Dismantling of ESRs** of various capacities and heights using crane (10 MT capacity) and handing over M.S./ C.I./ G.I. pipes, valves, bends, etc. to the Department However taking steel reinforcement by the dismantling agency including removing dismantled materials from site and disposing them at suitable place as directed, etc.complete.			
a	Capacity of E.S.R. upto 2 lakh litres and stagging upto 12.00 M height			
	i) Conjusted area.	Lit	**2.10**	**1.10**
	ii) Open Area	Lit	**1.05**	**0.54**
b	Capacity of ESR above 2 lakh ltrs. and staging upto 12 M hieght			
	i) Conjusted area	Lit	**2.10**	**1.10**
	ii) Open Area	Lit	**1.05**	**0.54**
3	Providing and fixing **M.S. gate 2.5 M wide** for compound with 40 mm dia M.S.black pipe medium class, approved grill work, RCC M - 150 side pillars of 25 cm x 40 cm x 2.5 M height, its foundation, finishing, painting etc. complete.	No.	**29573.0**	**3294.00**
4	Proividing and fixing **Wicket gate 1.0 M wide** for compound with 40 mm dia M.S.black pipe medium class, approved grill work, RCC M-150 side pillars of 25 cm x 40 cm x 2.5 M height, its foundiaion, finishing painting, etc. complete.	No.	**17111.00**	**2010.00**

Sr No	Item Description	Unit	Rate (in Rs.) 2019-20	LABOUR INVOLVED
5	**Taking Trial Bore** (Core Bore Sampling) by Calyxe machine with TCT/NX bits together undisturbed strata samples for investigation in all types of strata soft soil, murum, hard murum with boulders, soft rock hard rock & quartizite etc. The item includes all Hire & running cost of Callyx Machine conveying all materials to site of work excluding conveyance of callyx, machine and back sampling all over burden strata in glass jar and core samples serially numbered at site in a wooden Core Box, Samples to be taken at 1.0 m interval and conveying to the place as directed by Engineer-in-charge, The diameter of bore in overburden shall be 100 mm and of NX size (50mm) in other strata. The item shall also include M.S. casing pipe of 2.5 mm thick plate in overburdern only and shall be 1.0 m above GL with cap over it.			
a	In Overburden (Soft soil, murum)	Rmt	**1802.00**	**324.00**
b	In Weathered rock with boulders	Rmt	**5473.00**	**1281.00**
c	In Weathered rock / Soft rock	Rmt	**2808.00**	**640.00**
d	In Hard rock other than quartzite	Rmt	**3706.00**	**911.00**
e	In Hard rock quartzite	Rmt	**8610.00**	**1366.00**
6	**Providing pressure grouting at a pressure of 0.56 kg./sqcm** in required row/zigzag fashion as specified at 1.5 M interval as per site conditions to stop leakages through water retaining structures to the entire satisfaction of the Engineer-in-charge including material compound, hardening materials, compressor equipment including scaffolding smooth finishing, etc. complete.			
a	For masonry structure	Bag	**1036.00**	**68.00**
b	For Concrete strcture	Bag	**1024.00**	**63.00**
7	**Drilling 40 mm dia holes in masonry or concrete structure** with providing and fixing 0.5 M long G. I. pipe line for perssure grouting including all Material labour cost and machinery charges, etc. complete.	Rmt	**928.00**	**76.00**
8	**Providing and casting ferrocrate water tank** at site inculding all cost of labour and material, etc, complete. upto 25,000 literes (for foundation and providing and fixing taps, etc. shall be considered spearately).	Lit	**6.00**	

Sr No	Item Description	Unit	Rate (in Rs.) 2019-20	LABOUR INVOLVED
9	**Providing and applying two coat of Gamma** coating or equivalent such as Dr. Bake, Krishna conchem, Asian Paint, Atul ltd. Burger Paints, Epoxy primer 50 to 60 microns thick and covering two coat of Gamma coating or equivalent such as Dr. Bake, Krishna conchem, Asian Paint, Atul ltd. Burger Paints, 30 micron thick is to new M.S. pipe and structural steel or concrete surface including preparing the surface by finishing by solvent degreasing and derusting by applying chemical method and sacffolding of necessary etc. complete as manufcaturer's specifications.	Sqm	**328.00**	**163.00**
10	**Making cross connection to existing distribution main** of any type including excavation, breaking and removing exiting pipes, lowering, laying of specials and pipes in their position, refilling, closing the water supply in that area, dewatering and restarting the water supply, etc. complete as directed by Engineer-in-charge for following diameters of existing pipeline, irrespective of diameter of branch line (the number of joints involved will be paid separately depending upon the nature of joints and required pipes, valves and specials will be supplied free of cost at stores).			
	80 mm	No	**2158.00**	**1834.00**
	100 mm	No	**2443.00**	**2075.00**
	125 mm	No	**2688.00**	**2285.00**
	150 mm	No	**3023.00**	**2569.00**
	200 mm	No	**3191.00**	**2712.00**
	250 mm	No	**3835.00**	**3259.00**
	300 mm	No	**4488.00**	**3815.00**
	350 mm	No	**5281.00**	**4489.00**
	400 mm	No	**6343.00**	**5392.00**
	450 mm	No	**7108.00**	**6041.00**
	500 mm	No	**8759.00**	**7445.00**
	600 mm	No	**15557.00**	**13224.00**
	700 mm	No	**19121.00**	**16253.00**
	750 mm	No	**24114.00**	**20496.00**
	800 mm	No	**31006.00**	**26356.00**
	900 mm	No	**40532.00**	**34452.00**
	1000 mm	No	**56483.00**	**48011.00**
Note : Only 75% rate shall be payable till satisfactory hydraulic testing is given.				

Sr No	Item Description	Unit	Rate (in Rs.) 2019-20	LABOUR INVOLVED
11	**Dismantling dead pipeline of M.S./R.C.C./ C.I./ P.S.C. and G.I./ A. C. / P. V. C. / S. W. / H. D. P. E.** pipe including cost of necessary excavation and refilling of trenches, breaking the joints, lifting the pipes and stacking to the place as directed by Engineer-in-charge with all leads and lifts including cleaning the surface, etc. complete.			
A	**For M.S./R. C. C./ C.I./ P. S. C.**			
	80 mm	Rmt	**148.50**	**32.00**
	100 mm	Rmt	**165.00**	**47.00**
	125 mm	Rmt	**169.00**	**51.00**
	150 mm	Rmt	**172.00**	**54.00**
	200 mm	Rmt	**189.00**	**64.00**
	250 mm	Rmt	**209.00**	**75.00**
	300 mm	Rmt	**228.00**	**86.00**
	350 mm	Rmt	**256.00**	**106.00**
	400 mm	Rmt	**277.00**	**121.00**
	450 mm	Rmt	**315.00**	**133.00**
	500 mm	Rmt	**330.00**	**126.00**
	600 mm	Rmt	**405.00**	**177.00**
	700 mm	Rmt	**474.00**	**206.00**
	750 mm	Rmt	**531.00**	**233.00**
B	**For G.I./AC/PVC/S. W. / H.D.P.E.**			
	80 mm	Rmt	**89.10**	**20.00**
	100 mm	Rmt	**98.00**	**28.00**
	125 mm	Rmt	**100.00**	**31.00**
	150 mm	Rmt	**101.00**	**32.00**
	200 mm	Rmt	**116.00**	**39.00**
	250 mm	Rmt	**127.00**	**46.00**
	300 mm	Rmt	**135.00**	**51.00**
	350 mm	Rmt	**153.00**	**64.00**
	400 mm	Rmt	**167.00**	**73.00**
	450 mm	Rmt	**187.00**	**79.00**
	500 mm	Rmt	**199.00**	**84.00**
	600 mm	Rmt	**242.00**	**106.00**
	700 mm	Rmt	**284.00**	**124.00**
	750 mm	Rmt	**318.00**	**140.00**

Sr No	Item Description	Unit	Rate (in Rs.) 2019-20	LABOUR INVOLVED
12	**Providing and constructing two taps standpost** as per type design wih excavation 15 cm thick PCC 1:3:6 bedding 20 mm thick PCC 1:2:4 concrete for platform of 1.75 M dia. with side curb and bucket rest, 80 mm dia, heavy duty GI pipe central post duly filled therein with C. C. 1:2:4, 5 M long, 20 mm dia. medium G.I. pipe from point of tapping to standpost additional 20 mm dia G.I. pipe fixed vertically upto 15 mm dia self closing water taps, one brass ferrule etc. complete together with all labour and material charges as per drawing and as directed by Engineer-in-charge when good foundation is available. Rate includes draining arrangemment by excavating open gutters.	No	**8375.00**	**1113.00**
a	As above but when **R.C.C. platform or Precast standpost** issued free of cost.	No.	**4816.00**	**509.00**
13	**Providing and constructing two taps standpost** as per type design wih excavation 15cm thick boulder filling,15 cm thick PCC 1:3:6 bedding 20 mm thick PCC 1:2:4 concrete for platform of 1.75 M dia. with side curb and bucket rest, 80 mm dia, heavy duty GI pipe central post duly filled therein with C. C. 1:2:4, 5 M long, 20 mm dia. medium G.I. pipe from point of tapping to standpost additional 20 mm dia G.I. pipe fixed vertically upto 15 mm dia self closing water taps, one brass ferrule etc. complete together with all labour and material charges as per drawing and as directed by Engineer-in-charge **when B.C.Soil is available**. Rate includes draining arrangemment by excavating open gutters.	No	**8798.00**	**1114.00**
a	As above but when **R.C.C. platform or Precast standpost** issued free of cost.	No	**5465.00**	**608.00**
14	Pushing of M.S. pipe of following dia for **road crossing and Railway crossing by push through method** in all types of strata by using hydraulic jack and drilling machine of required diameter, below 3.0 m depth including lowering, laying, jointing of M.S. casing pipe including cost of labour fuels and material, required welding machinary, tripod, chain pulley block, vrane, blower etc. transportation and dewatering etc. complete as diredeted by Engineer-in-charge but excluding cost of M.S. pipe			
	a) 200 mm dia to 499 mm dia M.S. Pipe	Rmt	**25522.00**	--
	b) 500 mm dia to 1000 mm dia M.S. Pipe	Rmt	**31904.00**	--

Sr No	Item Description	Unit	Rate (in Rs.) 2019-20	LABOUR INVOLVED
15	Providing and erecting **slip form shuttering** including dismentaling after completion for constructing vertical structures such as jackwell, Balancing Tank, Bridge Column and for for horizontal structures in RCC. The item includs lifting arrangement, centering, formwork, normal dewatering,elecctrilcal arragement with generator set with all eqipments for slip form shuttering works with labour, materials and machinery, all rents, fuals, insurance charges. The rates is for various dia., depth and various sizes of structures, etc. complete.	Sqm		
	Note:-			
	A) All risks and costs lies with the Contractor itself.			
	B) The arrangement for lighting with cables till top height to be provided by the Contractor.			
	C) Any accident arising out of the work will be responsibility of the Contractor.			
	D) No idle charges for Machinery and Labour will be paid.			
	E) Insurance for all types of machinery and workers will be borne by the Contractor.			
16	Comprhensive **cleaning** of the ESR/ GSR/ Sump/ Clariflocculator or any storage unit of water supply, sewerage work in wet or dry condition during planned shutdown of the water supply with the help of water jet cleaning system including all lifts and leads upto 150 meters as required beyond the work site, stacking and spreading etc complete as directed by Engineer incharge. The rate to include all taxes, materials, equipment, electrical installation all labour consumables and transportation charges, energy charges for entire job.	Per 1000 Liters	**62.40**	
	1 the item to include record submission of photographs taken during the cleaning process.			
	2 Electric supply will have to be arranged by the firm.			

Sr No	Item Description	Unit	Rate (in Rs.) 2019-20	LABOUR INVOLVED
	3 In case of any dishappening at the site to any structure/equipments or humanbeing the same shall be sole responsibillty of the firm. The firm must ensure the guidelines of NHRC and factories Act. in this regard in case any compensation is to be paid, the same shall be borne by the firm.			
	4 The person who executes the work at site must have Electrical qualification or Electrical license.			
	5 The firm must get checked the water samples before start of work and after completion of work from the laboratory, the testing cost will be borne by the firm.			
	6 care should be taken such that column assembly of puming machinery is not disturbed or damaged otherwise necessary compensation would be recoverd from firm.			
	7 The water in the reservoir is highly clorinated having dose of 2PPM or more The firm must take all safety precaution before start of work and during execution period.			
	8 10% of payable amount will be withheld and will be released after 3 months from comletion of work.			
	Note : Conditions from Sr.No 1 to 8 shall form a part and parcel of the tender and must be included in draft ten-der papers			
17	Providing and making **MDPE pipe consumer service connectionon** C.I./D I/H.D.P.E.pipe With the help of electrofusion machine or Ratchet and dye drill including all labour, MDPE pipe10 m length, MDPEspecials like electrofusion tee, double compression elbow, female threaded adopter with metal insert, UPVC compression end ball valve, G.I. casing pipe of 40/50 mm for road crossing. The rate to include labour required,excavation fitting, refilling, Closing the water supply in that area, dewatering and restarting the water supply, transportation etc. complete as directed by Engineer in charge.			
	A)For connection on HDPE Pipes (With Road Crossing)			
	i) 15 mm	No	**4357.00**	
	ii) 20 mm	No	**5097.00**	
	iii) 25 mm	No	**5885.00**	

Sr No	Item Description	Unit	Rate (in Rs.) 2019-20	LABOUR INVOLVED
	B) For connection on HDPE Pipes (Without Road Crossing)			
	i) 15 mm	No	**3628.00**	
	ii) 20 mm	No	**3853.00**	
	iii) 25 mm	No	**4270.00**	
	C)For connection on C.I/D.I./G.I.Pipes(With Road Crossing)			
	i) 15 mm	No	**3053.00**	
	ii) 20 mm	No	**3792.00**	
	iii) 25 mm	No	**4479.00**	
	D)For connection on C.I/D.I./G.I.Pipes (Without Road Crossing)			
	i) 15 mm	No	**2291.00**	
	ii) 20 mm	No	**2696.00**	
	iii) 25 mm	No	**2966.00**	
18	Providing and applying 3 layer **polyethylene coating** of minimum 3000 micron composite coating and internal fusion bonded epoxy lining as per IS 3589 annex Cof 400 micron thickness for underground laying M.S.pipes,Similarly dual layer polyester coating of 400 micron externally and internal fusion bonded lining as per IS 3531 for above ground laying M.S. pipes .Rate shall include cost of material coating and wrapping over the pipes handling charges, preparation of pipe surface, all labour, material, including transporation of pipes from site of works to factory and back to site of works after coating etc. complete. (The rate is for inside plus outside area both included)			
	Note : Pipe coating shall be done at factory.			
		Sqm	**1308.00**	

Sr No	Item Description	Unit	Rate (in Rs.) 2019-20	LABOUR INVOLVED
19	Supply and installation of **pre fabricated ground water srorage bolted tanks**, a complete package in knockdown ready to assemble construction consisting of outer wall surface made out of special grade hot dip aluminum - Zinc alloy, metalic factory coated steel confirming to IS-15961-2012, minimum thickness of 0.6 mm. The inner surface should be provided with liners of minimum 0.6 mm thickness of reinforce polyethylene or polyepropelene or metallo cene material suitable for drinking water purpose. Top cover shall be of polyethene tape monophylament yarn or woven polypropylene or corrugated G. I. sheets. Rate includes cost of the inlet, outlet, overflow. Pipes upto 5 m from periphery of the tank including ball valves of standard quality, aluminum ladder, level indicator, water tightness test, trasportation upto site of work and all taxes etc. complete.			
	Notes :-			
	1) Above tanks can be installed on elevated platform. (ESR) The rate of tank dose not include the cost of elevated platform.2% extra to be considered for installation of tank on elevated on elevated platform. The elevated platform needs to be designed as per requirements & which will be paid separately. The elevated platform must be of steel framed structure.			
	2) For the dome type currougated roof structure with hot dip galvanized trusses with GI manhole for access for cleaning and maintenance. 10% extra shall be added.			
	3) For heavy duty five layer polypropylene reinforced liner with metallocene contact layer having a minimum thickness of 1mm. 10% extra shall be added.			
	4) Incase rain water harvesting filters & system to catch the rain from the GI tank roof is mounted on the tank roof and supplied with the tank then 10% extra shall be added.			

Sr.No.	Capacity in Litres	Unit	With RCC Foundation	Without Foundation
1	25000	Lit	**13.18**	**12.50**
2	30000	Lit	**11.96**	**11.28**
3	50000	Lit	**10.93**	**10.25**
4	75000	Lit	**9.30**	**8.63**
5	100000	Lit	**8.03**	**7.35**

Sr No	Item Description	Unit	Rate (in Rs.) 2019-20	LABOUR INVOLVED
	Item No.19 Contd-----			
6	150000	Lit	**7.19**	**6.51**
7	200000	Lit	**6.68**	**6.00**
8	250000	Lit	**6.06**	**5.38**
9	300000	Lit	**5.87**	**5.19**
10	375000	Lit	**5.14**	**4.46**
11	500000	Lit	**4.72**	**4.04**
12	750000	Lit	**4.40**	**3.73**
13	1000000	Lit	**4.24**	**3.57**
14	1500000	Lit	**3.92**	**3.24**
20	Providing and supplying **Poly aluminium chloride (PAC)** of medium basicity, confirming to IS:15573:2005, and ISI mark and manufacture from vergin raw material in liquid/powder form with PH of 5%, having specific gravity 1.204 for use in water treatment plant for treatment of low to high turbidity water for drinking purpose including all local and central taxes, insurance charges, transportation and freight tax charges, third party charges, with material testing charges (from VJTI/IIT/ DPH lab.), loading and unloading charges and conveyance to water works and R.R. schemes sites in Maharashtra etc. complete as per MJP approved.			
	PAC medium basicity in **powder** form.	M.T.	**28100.00**	
	PAC medium basicity in **liquid** form.	M.T.	**9596.00**	

Section - I- (I) - C.I. / D.I. PIPES				
Sr No	Item Description	Unit	Rate (in Rs.) 2019-2020	
1	Providing and supplying ISI mark **C.I. S/S pipe** (push on joints pressure pipes of following class and diameters confirming to the I. S. specification inclusive cost of jointing materials (Rubber gasket of EPDM Quality) excluding GST levied by GOI & GOM in all respect including Third party inspection charges of TPI Agency approved by MJP including Transit insurance, Railway Freight, Unloading from railway wagon, Loading into Truck, Transportation to departmental store, unloading, stacking etc. completed as directed by Engineer in charge (IS 1536/2001 for pipes and IS 158/1969 and IS 12820/ 1989 or latest edition/revision with amendments for Rubber Gaskets. (IS-1536 / 2001) (Suitable for Tyton / Pig lead joints)			
a)	**Class "LA"**			
i)	80mm	Rmt	**797**	
ii)	100mm	Rmt	**999**	
iii)	150mm	Rmt	**1622**	
iv)	200mm	Rmt	**2335**	
v)	250mm	Rmt	**3147**	
vi)	300mm	Rmt	**4058**	
b)	**Class "A"**			
i)	80mm	Rmt	**823**	
ii)	100mm	Rmt	**1028**	
iii)	125mm	Rmt	**1338**	
iv)	150mm	Rmt	**1647**	
v)	200mm	Rmt	**2380**	
vi)	250mm	Rmt	**3216**	
vii)	300mm	Rmt	**4163**	
viii)	350 mm	Rmt	**5204**	
ix)	400 mm	Rmt	**6383**	
x)	450 mm	Rmt	**7732**	
xi)	500 mm	Rmt	**8865**	
xii)	600 mm	Rmt	**11837**	
xiii)	700 mm	Rmt	**15427**	
xiv)	750 mm	Rmt	**17135**	
xv)	800 mm	Rmt	**19156**	
xvi)	900 mm	Rmt	**23316**	
xvii)	1000mm	Rmt	**28046**	
c)	**Class "B"**			
i)	80mm	Rmt	**875**	
ii)	100mm	Rmt	**1096**	

Sr No	Item Description	Unit	Rate (in Rs.) 2019-2020	
iii)	125mm	Rmt	**1440**	
iv)	150mm	Rmt	**1773**	
v)	200mm	Rmt	**2572**	
vi)	250mm	Rmt	**3478**	
vii)	300mm	Rmt	**4510**	
viii)	350 mm	Rmt	**5645**	
ix)	400 mm	Rmt	**6518**	
x)	450 mm	Rmt	**8343**	
xi)	500 mm	Rmt	**9590**	
xii)	600 mm	Rmt	**12636**	
xiii)	700 mm	Rmt	**16517**	
xiv)	750 mm	Rmt	**18590**	
xv)	800 mm	Rmt	**20722**	
xvi)	900 mm	Rmt	**25262**	
xvii)	1000mm	Rmt	**30308**	
2	**Lowering laying and jointing with SBR ruber gaskets C.I. S/S pipes** of various classes with CI / MS specials of following diameter in proper position, grade and alignment as directed by Engineer-in-charge including conveyance of material from stores to site of work, including cost of jointing materials and rubber rings labour etc. complete. Note : Only SBR Rubber gaskets to be used as per IS-5382 and IS-12820.		Without Rubber Ring	With Rubber Ring
a)	**C.I. L.A. Class/ Mortar line D.I.K-9/ K-7**			
i)	80 mm	Rmt	**48.00**	**55.00**
ii)	100 mm	Rmt	**58.00**	**64.00**
iii)	150 mm	Rmt	**78.00**	**87.00**
iv)	200 mm	Rmt	**103.00**	**114.00**
v)	250 mm	Rmt	**135.00**	**149.00**
vi)	300 mm	Rmt	**146.00**	**167.00**
vii)	350 mm	Rmt	**182.00**	**205.00**
viii)	400 mm	Rmt	**219.00**	**253.00**
ix)	450 mm	Rmt	**219.00**	**266.00**
x)	500 mm	Rmt	**253.00**	**308.00**
xi)	600 mm	Rmt	**332.00**	**409.00**
xii)	700 mm	Rmt	**429.00**	**576.00**
xiii)	750 mm	Rmt	**480.00**	**630.00**
xiv)	800 mm	Rmt	**587.00**	**739.00**
xv)	900 mm	Rmt	**702.00**	**928.00**
xvi)	1000mm	Rmt	**829.00**	**1125.00**
b)	**C.I. "A" Class**			
i)	80 mm	Rmt	**50.00**	**62.00**

Sr No	Item Description	Unit	Rate (in Rs.) 2019-2020	
ii)	100 mm	Rmt	**62.00**	**73.00**
iii)	125 mm	Rmt	**79.00**	**87.00**
iv)	150 mm	Rmt	**86.00**	**94.00**
v)	200 mm	Rmt	**111.00**	**122.00**
vi)	250 mm	Rmt	**146.00**	**161.00**
vii)	300 mm	Rmt	**160.00**	**179.00**
viii)	350 mm	Rmt	**196.00**	**220.00**
ix)	400 mm	Rmt	**221.00**	**254.00**
x)	450 mm	Rmt	**232.00**	**268.00**
xi)	500 mm	Rmt	**273.00**	**327.00**
xii)	600 mm	Rmt	**361.00**	**437.00**
xiii)	700 mm	Rmt	**464.00**	**611.00**
xiv)	750 mm	Rmt	**523.00**	**670.00**
xv)	800 mm	Rmt	**616.00**	**766.00**
xvi)	900 mm	Rmt	**741.00**	**967.00**
xvii)	1000mm	Rmt	**866.00**	**1162.00**
c)	**C.I. "B" Class**			
i)	80 mm	Rmt	**55.00**	**64.00**
ii)	100 mm	Rmt	**65.00**	**79.00**
iii)	125 mm	Rmt	**85.00**	**94.00**
iv)	150 mm	Rmt	**95.00**	**106.00**
v)	200 mm	Rmt	**122.00**	**136.00**
vi)	250 mm	Rmt	**158.00**	**179.00**
vii)	300 mm	Rmt	**173.00**	**193.00**
viii)	350 mm	Rmt	**212.00**	**246.00**
ix)	400 mm	Rmt	**246.00**	**279.00**
x)	450 mm	Rmt	**251.00**	**287.00**
xi)	500 mm	Rmt	**294.00**	**348.00**
xii)	600 mm	Rmt	**391.00**	**464.00**
xiii)	700 mm	Rmt	**502.00**	**645.00**
xiv)	750 mm	Rmt	**567.00**	**714.00**
xv)	800 mm	Rmt	**661.00**	**809.00**
xvi)	900 mm	Rmt	**783.00**	**1008.00**
xvii)	1000mm	Rmt	**894.00**	**1187.00**

Sr No	Item Description	Unit	Rate (in Rs.) 2019-2020	
3	**Providing D.I. pipes** (push on joints pressure pipes of D. I. of following class and diameters confirming to the I. S. specification inclusive cost of jointing materials (Rubber gasket of EPDM Quality) excluding GST levied by GOI & GOM in all respect including Third party inspection charges of TPI Agency approved by MJP including Transit insurance, Railway Freight, Unloading from railway wagon, Loading into Truck, Transportation to departmental store, unloading,stacking etc. completed as directed by Engineer in charges (IS 1536/2001 for pipes and IS 158/1969 and IS 12820/1989 or latest edition/revision with amendments for Rubber Gaskets. (IS:8329-2000 Latest Version)			
	D.I. K-9			
i)	100 mm	Rmt	**952.00**	
ii)	150 mm	Rmt	**1383.00**	
iii)	200 mm	Rmt	**1870.00**	
iv)	250 mm	Rmt	**2485.00**	
v)	300 mm	Rmt	**3106.00**	
vi)	350 mm	Rmt	**3919.00**	
vii)	400 mm	Rmt	**4558.00**	
viii)	450 mm	Rmt	**5560.00**	
ix)	500 mm	Rmt	**6405.00**	
x)	600 mm	Rmt	**8175.00**	
xi)	700 mm	Rmt	**10370.00**	
xii)	750 mm	Rmt	**12130.00**	
xiii)	800 mm	Rmt	**13188.00**	
xiv)	900 mm	Rmt	**16286.00**	
xv)	1000mm	Rmt	**19580.00**	
xvi)	1100mm	Rmt	**24397.00**	
xvii)	1200mm	Rmt	**27874.00**	
	D.I. K-7			
i)	100 mm	Rmt	**808.00**	
ii)	150 mm	Rmt	**1192.00**	
iii)	200 mm	Rmt	**1469.00**	
iv)	250 mm	Rmt	**2044.00**	
v)	300 mm	Rmt	**2505.00**	
vi)	350 mm .	Rmt	**3371.00**	
vii)	400 mm	Rmt	**3774.00**	
viii)	450 mm	Rmt	**4696.00**	
ix)	500 mm	Rmt	**5349.60**	

Sr No	Item Description	Unit	Rate (in Rs.) 2019-2020	
x)	600 mm	Rmt	**6817.50**	
xi)	700 mm	Rmt	**9245.00**	
xii)	750 mm	Rmt	**10759.00**	
xiii)	800 mm	Rmt	**12215.00**	
xiv)	900 mm	Rmt	**14852.00**	
xv)	1000 mm	Rmt	**17900.00**	
xvi)	1100mm	Rmt	**24375.00**	
xvii)	1200mm	Rmt	**26964.00**	
4	Providing and making **lead caulked joint** with molten lead to Cast Iron pipes and / or specials of all classes and fitting of following dia including cost of lead and all jointing material, labour, hydraulic testing etc. complete.			
i)	80mm	Rmt	**792.00**	
ii)	100 mm	Rmt	**980.00**	
iii)	125 mm	Rmt	**1166.00**	
iv)	150 mm	Rmt	**1448.00**	
v)	200 mm	Rmt	**2111.00**	
vi)	250 mm	Rmt	**2563.00**	
vii)	300 mm	Rmt	**3091.00**	
viii)	350 mm	Rmt	**3504.00**	
ix)	400 mm	Rmt	**4087.00**	
x)	450 mm	Rmt	**5675.00**	
xi)	500 mm	Rmt	**6101.00**	
xii)	600 mm	Rmt	**7839.00**	
xiii)	700 mm	Rmt	**9209.00**	
xiv)	750 mm	Rmt	**10459.00**	
xv)	800 mm	Rmt	**11232.00**	
xvi)	900 mm	Rmt	**11980.00**	
xvii)	1000 mm	Rmt	**12774.00**	
NOTE: Only 85%payment shall be payable till satisfactory hydraulic testing is given				
5	Providing and supplying ISI standard **CI double flanged pipes** excluding GST levied by GOI & GOM in all respect including railway freight, insurance, unloading from railway wagon, loading into truck transport to stores, unloading etc. complete as directed by Engineer-in-charge.			
i)	80mm	Rmt	**1333.00**	
ii)	100 mm	Rmt	**1648.00**	
iii)	125 mm	Rmt	**2145.00**	
iv)	150 mm	Rmt	**2677.00**	
v)	200 mm	Rmt	**4108.00**	
vi)	250 mm	Rmt	**5535.00**	
vii)	300 mm	Rmt	**7117.00**	
viii)	350 mm	Rmt	**9289.00**	

Sr No	Item Description	Unit	Rate (in Rs.) 2019-2020	
ix)	400 mm	Rmt	**11326.00**	
x)	450 mm	Rmt	**13600.00**	
xi)	500 mm	Rmt	**15961.00**	
xii)	600 mm	Rmt	**22705.00**	
xiii)	700 mm	Rmt	**30419.00**	
xiv)	750 mm	Rmt	**33097.00**	
6	Providing and supplying ISI standard **CI flanged / S& S specials** excluding GST levied by GOI & GOM in all respect including railway freight, insurance, unloading from railway wagon, loading into truck transport to departmental store, unloading stacking etc. complete.			
a)	**D/F Specials**			
i)	80 to 300 mm dia.	Kg	**66.00**	
ii)	350 to 600 mm dia	Kg	**71.00**	
iii)	above 600 mm dia	Kg	**76.00**	
b)	**S/S Specials**			
i)	80 to 300 mm dia.	Kg	**64.00**	
ii)	350 to 600 mm dia	Kg	**68.00**	
iii)	above 600 mm dia	Kg	**73.00**	
c)	**Plain ended**			
i)	80 to 300 mm dia.	Kg	**62.00**	
ii)	350 to 600 mm dia	Kg	**68.00**	
iii)	above 600 mm dia	Kg	**73.00**	
7	Providing and supplying ISI standard **MS specials** of required thickness with 3 coats of approved make epoxy paint (Shalimar, Ciba or Mahindra & Mahindra make) from inside and outside excluding GST levied by GOI & GOM in all respect including inspection charges, transportation to stores and stacking, etc. complete.			
a)	Machine ends suitable for PSC pipes of all diameters as perdetailed drawing with 10 mmthick x 0.7 M long barrel	Kg	**84.00**	
b)	Only flanges with machining and drilling holes, etc. complete more than 40 mm thick	Kg	**82.00**	
c)	Double flanged specials of all	Kg	**79.00**	
d)	All socktted specials or socketed branch flanged specials of all diameters	Kg	**79.00**	
e)	Plain ended specials or plain ended branch flanged specials of all diameters	Kg	**79.00**	
f)	MS barrels (pipe pieces) locally manufactured (for small quantities)	Kg	**77.00**	

Sr No	Item Description	Unit	Rate (in Rs.) 2019-2020	
8	Providing and making **flanged joints** to flanged C.I./M.S. pipes of all classes/specials etc. including cost of all jointing materials (rubber packing, nut bolts, etc.), labour, hydraulic testing etc. complete.			
i)	80mm	Joint	**239.00**	
ii)	100 mm	Joint	**412.00**	
iii)	125 mm	Joint	**431.00**	
iv)	150 mm	Joint	**827.00**	
v)	200 mm	Joint	**857.00**	
vi)	250 mm	Joint	**1229.00**	
vii)	300 mm	Joint	**1276.00**	
viii)	350 mm	Joint	**1662.00**	
ix)	400 mm	Joint	**2071.00**	
x)	450 mm	Joint	**2531.00**	
xi)	500 mm	Joint	**2620.00**	
xii)	600 mm	Joint	**2813.00**	
xiii)	700 mm	Joint	**4237.00**	
xiv)	750 mm	Joint	**4356.00**	
xv)	800 mm	Joint	**6028.00**	
xvi)	900 mm	Joint	**6248.00**	
xvii)	1000 mm	Joint	**6468.00**	
NOTE: Only 85%payment shall be payable till satisfactory hydraulic testing is given				
9	**Erecting and hoisting** in position and jointing, testing M.S./ C.I. D/F pipes and specials in vertical position including cost of all jointing materials (rubber packing, nut bolts, etc.) labour, scaffolding, hydraulic testing etc. complete.			
i)	80mm	Joint	**242.00**	
ii)	100 mm	Joint	**409.00**	
iii)	125 mm	Joint	**432.00**	
iv)	150 mm	Joint	**804.00**	
v)	200 mm	Joint	**854.00**	
vi)	250 mm	Joint	**1220.00**	
vii)	300 mm	Joint	**1287.00**	
viii)	350 mm	Joint	**1672.00**	
ix)	400 mm	Joint	**2079.00**	

Sr No	Item Description	Unit	Rate (in Rs.) 2019-2020	
x)	450 mm	Joint	**2540.00**	
xi)	500 mm	Joint	**2658.00**	
xii)	600 mm	Joint	**2917.00**	
xiii)	700 mm	Joint	**4327.00**	
xiv)	750 mm	Joint	**4492.00**	
xv)	800 mm	Joint	**6083.00**	
xvi)	900 mm	Joint	**6403.00**	
xvii)	1000 mm	Joint	**6749.00**	
NOTE: Only 85%payment shall be payable till satisfactory hydraulic testing is given				
10	Providing and supplying ISI standard **D. I. specials & fitting** with sealing rubber gasket of S.B.R,complete with cast iron follower gland and M. S. nut bolts coated or otherwise protected from rusting and suitable for D.I.pipes including cost of labour, materials, and transportation to stores, loading and unloading excluding GST levied by GOI & GOM in all respect etc. complete as per IS-9523.			
	For all types of specials, bends tees etc.			
a)	80 to 300 mm dia.	Kg	**103.00**	
b)	350 mm & above dia.	Kg	**125.00**	
11	Providing and supplying ISI standard welded **DI double flanged pipe** excluding GST levied by GOI & GOM in all respect but including railway freight, insurance, unloading from railway wagon, loading into truck transport to store, unloading, stacking etc. complete as directed by Engineer -in-charge. (for 2.75 m bare pipe)			
i)	100 mm	Rmt	**1725.00**	
iii)	150 mm	Rmt	**2343.00**	
iv)	200 mm	Rmt	**2997.00**	
v)	250 mm	Rmt	**4069.00**	
vi)	300 mm	Rmt	**5120.00**	
vii)	350 mm	Rmt	**6669.00**	
viii)	400 mm	Rmt	**8072.00**	
ix)	450 mm	Rmt	**9646.00**	
x)	500 mm	Rmt	**11212.00**	
xi)	600 mm	Rmt	**14762.00**	
xii)	700 mm	Rmt	**19864.00**	
xiv)	800 mm	Rmt	**24281.00**	
xv)	900 mm	Rmt	**30139.00**	
xvi)	1000 mm	Rmt	**35388.00**	

Sr No	Item Description	Unit	Rate (in Rs.) 2019-2020	
12	**Hydraulic testing of C.I./D.I. pipe line** to specified pressure including cost of all materials and labour and water for testing for specified length including cutting, placing end cap making arrangement for filling safe water using reciprocating type pumps which should be able to provide specified test pressure gauges and other necessary equipments, labour, operation charges, etc. required for testing. The rate under this item shall also include cost of retesting, if necessary and reinstating to original position using water supplied by the contractor.			
	A) C.I. L.A. Class / Mortar lined D.I.K-9/ K-7			
i)	80 mm	Km	**6155.00**	
ii)	100 mm	Km	**7201.00**	
iii)	125 mm	Km	**8942.00**	
iv)	150 mm	Km	**9639.00**	
v)	200 mm	Km	**12659.00**	
vi)	250 mm	Km	**16491.00**	
vii)	300 mm	Km	**18581.00**	
viii)	350 mm	Km	**22646.00**	
ix)	400 mm	Km	**28104.00**	
x)	450 mm	Km	**29614.00**	
xi)	500 mm	Km	**34143.00**	
xii)	600 mm	Km	**45524.00**	
xiii)	700 mm	Km	**63986.00**	
xiv)	750 mm	Km	**70028.00**	
xv)	800 mm	Km	**82222.00**	
xvi)	900 mm	Km	**103126.00**	
xvii)	1000mm	Km	**125074.00**	
	B) C.I. "A" Class			
i)	80 mm	Km	**6852.00**	
ii)	100 mm	Km	**8014.00**	
iii)	125 mm	Km	**9639.00**	
iv)	150 mm	Km	**10452.00**	
v)	200 mm	Km	**13472.00**	
vi)	250 mm	Km	**17768.00**	
vii)	300 mm	Km	**19858.00**	
viii)	350 mm	Km	**24388.00**	
ix)	400 mm	Km	**28221.00**	
x)	450 mm	Km	**29846.00**	
xi)	500 mm	Km	**36350.00**	
xii)	600 mm	Km	**48543.00**	
xiii)	700 mm	Km	**67822.00**	
xiv)	750 mm	Km	**74441.00**	
xv)	800 mm	Km	**85125.00**	
xvi)	900 mm	Km	**107538.00**	
xvii)	1000mm	Km	**129023.00**	

Sr No	Item Description	Unit	Rate (in Rs.) 2019-2020	
	C) C.I. "B" Class			
i)	80 mm	Km	**7201.00**	
ii)	100 mm	Km	**8710.00**	
iii)	125 mm	Km	**10452.00**	
iv)	150 mm	Km	**11729.00**	
v)	200 mm	Km	**15098.00**	
vi)	250 mm	Km	**19975.00**	
vii)	300 mm	Km	**21369.00**	
viii)	350 mm	Km	**27408.00**	
ix)	400 mm	Km	**31123.00**	
x)	450 mm	Km	**31936.00**	
xi)	500 mm	Km	**38556.00**	
xii)	600 mm	Km	**51563.00**	
xiii)	700 mm	Km	**71654.00**	
xiv)	750 mm	Km	**79319.00**	
xv)	800 mm	Km	**89887.00**	
xvi)	900 mm	Km	**111951.00**	
xvii)	1000mm	Km	**131926.00**	
13	Providing and supplying **C.I. detachable joints suitable for A. C. pressure pipes** manufactured as per IS-1538-1993 standareds of following calass and diameter including cost of insurance, railway freight, inspection charges, unloding from railway wagon, loding into truck, transporting to departmental store, unloading, stacking and cost of rubber rings, nut bolts. excluding GST levied by GOI & GOM in all respect etc. complete (IS-1538-1993)			
	Class 10/15			
i)	80 mm	No	**254.00**	
ii)	100 mm	No	**321.00**	
iii)	125 mm	No	**432.00**	
iv)	150 mm	No	**538.00**	
v)	200 mm	No	**812.00**	
vi)	250 mm	No	**1017.00**	
vii)	300 mm	No	**1395.00**	
	Class 20			
i)	80 mm	No	**392.00**	
ii)	100 mm	No	**408.00**	
iii)	125 mm	No	**507.00**	
iv)	150 mm	No	**608.00**	
v)	200 mm	No	**817.00**	
vi)	250 mm	No	**1153.00**	
vii)	300 mm	No	**1651.00**	

Sr No	Item Description	Unit	Rate (in Rs.) 2019-2020
1	Providing and supplying in standard lengths ISI mark **rigid unplasticised PVC pipes suitable for potable water with solvent cement joints** including cost of couplers, as per IS specification no. 4985 / 1988 excluding GST levied by GOI and GOM in all respect, including transportation, freight charges, inspection charges, loading, unloading, conveyance to the departmental stores and stacking the same in closed shed duly protected from sun rays and rains including cost of jointing material i.e. solvent cement, etc. complete (selffit type to be jointed with cement solvent).		
	Note :		
	1) 10% of cost of pipes shall be considered for cost of PVC specials for estimate purpose only.		
	2) One coupler and required cement solvent shall be provided with each full length pipe cost of which is		
a)	**Working Pressure 4 Kg./Sq.cm.**		
	63 mm	Rmt	**50.00**
	75 mm	Rmt	**71.00**
	90 mm	Rmt	**99.00**
	110 mm	Rmt	**135.00**
	140 mm	Rmt	**226.00**
	160 mm	Rmt	**297.00**
	180 mm	Rmt	**406.00**
	200 mm	Rmt	**501.00**
	225 mm	Rmt	**641.00**
	250 mm	Rmt	**783.00**
	280 mm	Rmt	**1041.00**
	315 mm	Rmt	**1324.00**
b)	**Working Pressure 6 Kg./Sq.cm.**		
	63 mm	Rmt	**71.00**
	75 mm	Rmt	**101.00**
	90 mm	Rmt	**147.00**
	110 mm	Rmt	**201.00**
	140 mm	Rmt	**335.00**
	160 mm	Rmt	**433.00**
	180 mm	Rmt	**575.00**
	200 mm	Rmt	**736.00**
	225 mm	Rmt	**928.00**
	250 mm	Rmt	**1158.00**
	280 mm	Rmt	**1527.00**
	315 mm	Rmt	**1949.00**

Sr No	Item Description	Unit	Rate (in Rs.)
c)	**Working Pressure 8 Kg./Sq.cm.**		
	63 mm	Rmt	**98.00**
	75 mm	Rmt	**140.00**
	90 mm	Rmt	**198.00**
	110 mm	Rmt	**281.00**
	140 mm	Rmt	**465.00**
	160 mm	Rmt	**610.00**
	180 mm	Rmt	**807.00**
	200 mm	Rmt	**1015.00**
	225 mm	Rmt	**1289.00**
	250 mm	Rmt	**1612.00**
	280 mm	Rmt	**2123.00**
	315 mm	Rmt	**2689.00**
d)	**Working Pressure 10 Kg./Sq.cm.**		
	63 mm	Rmt	**119.00**
	75 mm	Rmt	**169.00**
	90 mm	Rmt	**242.00**
	110 mm	Rmt	**342.00**
	140 mm	Rmt	**554.00**
	160 mm	Rmt	**725.00**
	180 mm	Rmt	**999.00**
	200 mm	Rmt	**1235.00**
	225 mm	Rmt	**1575.00**
	250 mm	Rmt	**1990.00**
	280 mm	Rmt	**2503.00**
	315 mm	Rmt	**3179.00**
e)	**Working Pressure 12.5 Kg./Sq.cm.**		
	63 mm	Rmt	**151.00**
	75 mm	Rmt	**212.00**
	90 mm	Rmt	**307.00**
	110 mm	Rmt	**434.00**
	140 mm	Rmt	**707.00**
	160 mm	Rmt	**930.00**
	180 mm	Rmt	**1271.00**
	200 mm	Rmt	**1576.00**
	225 mm	Rmt	**2003.00**
	250 mm	Rmt	**2533.00**
	280 mm	Rmt	**3188.00**
	315 mm	Rmt	**4064.00**

Sr No	Item Description	Unit	Rate (in Rs.)
2	Providing and supplying in standard lengths ISI mark **rigid unplastised PVC for potable water with rubber ring joints** including cost of rubber ring as per IS-4985-1998, excluding GST levied by GOI and GOM in all respect, including transportation, freight charges, transit insurance, inspection charges, loading, unloading, conveyance to store and stacking the same in closed shed duly protected from sun rays and rains, etc. complete (with third party inspection) (socketed)		
	Note:- One Rubber ring shall be provided with full length pipe, cost of which is included below.		
a)	**Working Pressure 4 Kg./Sq.cm.**		
	63 mm	Rmt	**55.00**
	75 mm	Rmt	**77.00**
	90 mm	Rmt	**110.00**
	110 mm	Rmt	**151.00**
	125 mm	Rmt	**207.00**
	140 mm	Rmt	**251.00**
	160 mm	Rmt	**331.00**
	180 mm	Rmt	**450.00**
	200 mm	Rmt	**554.00**
	225 mm	Rmt	**712.00**
	250 mm	Rmt	**872.00**
	280 mm	Rmt	**1156.00**
	315 mm	Rmt	**1469.00**
b)	**Working Pressure 6 Kg./Sq.cm.**		
	63 mm	Rmt	**78.00**
	75 mm	Rmt	**113.00**
	90 mm	Rmt	**163.00**
	110 mm	Rmt	**222.00**
	125 mm	Rmt	**307.00**
	140 mm	Rmt	**373.00**
	160 mm	Rmt	**480.00**
	180 mm	Rmt	**641.00**
	200 mm	Rmt	**815.00**
	225 mm	Rmt	**1030.00**
	250 mm	Rmt	**1287.00**
	280 mm	Rmt	**1696.00**
	315 mm	Rmt	**2163.00**
c)	**Working Pressure 8 Kg./Sq.cm.**		
	63 mm	Rmt	**107.00**
	75 mm	Rmt	**157.00**
	90 mm	Rmt	**220.00**
	110 mm	Rmt	**311.00**
	125 mm	Rmt	**429.00**
	140 mm	Rmt	**516.00**

Sr No	Item Description	Unit	Rate (in Rs.)
	160 mm	Rmt	**677.00**
	180 mm	Rmt	**898.00**
	200 mm	Rmt	**1128.00**
	225 mm	Rmt	**1431.00**
	250 mm	Rmt	**1789.00**
	280 mm	Rmt	**2358.00**
	315 mm	Rmt	**2988.00**
d)	**Working Pressure 10 Kg./Sq.cm.**		
	63 mm	Rmt	**132.00**
	75 mm	Rmt	**188.00**
	90 mm	Rmt	**268.00**
	110 mm	Rmt	**381.00**
	125 mm	Rmt	**523.00**
	140 mm	Rmt	**615.00**
	160 mm	Rmt	**805.00**
	180 mm	Rmt	**1109.00**
	200 mm	Rmt	**1371.00**
	225 mm	Rmt	**1749.00**
	250 mm	Rmt	**2212.00**
	280 mm	Rmt	**2780.00**
	315 mm	Rmt	**3532.00**
e)	**Working Pressure 12.5 Kg./Sq.cm.**		
	63 mm	Rmt	**166.00**
	75 mm	Rmt	**235.00**
	90 mm	Rmt	**341.00**
	110 mm	Rmt	**484.00**
	125 mm	Rmt	**667.00**
	140 mm	Rmt	**785.00**
	160 mm	Rmt	**1031.00**
	180 mm	Rmt	**1411.00**
	200 mm	Rmt	**1750.00**
	225 mm	Rmt	**2225.00**
	250 mm	Rmt	**2812.00**
	280 mm	Rmt	**3539.00**
	315 mm	Rmt	**4510.00**
3	Providing and supplying in ISI mark r**igid PVC-O class-500 s/s pipe (push on joints) pressure pipes** confirming to IS specifications no 16647-2017 inclusive cost of EPDM gasket seals on joints including all statutory duties excluding GST levied by Government of India and Government of Maharashtra in all respect including third party inspection charges of agency approved by MJP, transit insurance loading,unloading charges conveyance to the departmental store / site and stacking the same in closed shade duly protected from sunrays etc complete.		

Sr No	Item Description	Unit	Rate (in Rs.)
	Note :- a) 10% cost of pipe shall be considered for the cost of O-PVC /DI compatable specials for estimate purpose b) Diameter wise overlapping lengths are respectively, 110mm 2.92%, 160mm- 3.33%, 200mm 3.75%, 250mm 4.5%, 315mm 5.42%, 400mm 6.25%		
	a) Class - 500 PN - 12.5		
	110 mm	Rmt	**519.00**
	160 mm	Rmt	**895.00**
	200 mm	Rmt	**1226.00**
	250 mm	Rmt	**1681.00**
	315 mm	Rmt	**2180.00**
	400 mm	Rmt	**3360.00**
	450 mm	Rmt	**4045.00**
	500 mm	Rmt	**4687.00**
	560 mm	Rmt	**6248.00**
	630 mm	Rmt	**7947.00**
	b) Class - 500 PN - 16		
	110 mm	Rmt	**622.00**
	160 mm	Rmt	**1042.00**
	200 mm	Rmt	**1292.00**
	250 mm	Rmt	**1818.00**
	315 mm	Rmt	**2291.00**
	400 mm	Rmt	**3495.00**
	450 mm	Rmt	**4609.00**
	500 mm	Rmt	**5751.00**
	560 mm	Rmt	**7161.00**
	630 mm	Rmt	**9071.00**
	c) Class - 500 PN - 25		
	110 mm	Rmt	**775.00**
	160 mm	Rmt	**1126.00**
	200 mm	Rmt	**1532.00**
	250 mm	Rmt	**2144.00**
	315 mm	Rmt	**3344.00**
	400 mm	Rmt	**5072.00**
	450 mm	Rmt	**6496.00**
	500 mm	Rmt	**8040.00**
	560 mm	Rmt	**10067.00**
	630 mm	Rmt	**12730.00**

Sr No	Item Description	Unit	Rate (in Rs.)
4	**Lowering, laying and jointing with P.V.C. pipes and specials** of following class and diameter including cost of conveyance from stores to site of works including cost of all labour, material, except cement solvent, rubber ring, as per IS code, etc. complete (with cement solvent joint / ring fit joint). Note: For PVC O pipes of all pressure 4 (b) rates applied.		
a)	**Working Pressure 4 Kg./Sq.cm.**		
i)	63 mm	Rmt	**18.00**
ii)	75 mm	Rmt	**23.00**
iii)	90 mm	Rmt	**28.00**
iv)	110 mm	Rmt	**32.00**
v)	125 mm	Rmt	**34.00**
vi)	140 mm	Rmt	**37.00**
vii)	160 mm	Rmt	**42.00**
viii)	180 mm	Rmt	**46.00**
ix)	200 mm	Rmt	**50.00**
x)	225 mm	Rmt	**58.00**
xi)	250 mm	Rmt	**63.00**
xii)	280 mm	Rmt	**69.00**
xiii)	315 mm	Rmt	**78.00**
b)			
	Working Pressure 6 to 12.5 Kg./Sq.cm.		
i)	63 mm	Rmt	**24.00**
ii)	75 mm	Rmt	**32.00**
iii)	90 mm	Rmt	**36.00**
iv)	110 mm	Rmt	**41.00**
v)	125 mm	Rmt	**44.00**
vi)	140 mm	Rmt	**48.00**
vii)	160 mm	Rmt	**51.00**
viii)	180 mm	Rmt	**58.00**
ix)	200 mm	Rmt	**64.00**
x)	225 mm	Rmt	**69.00**
xi)	250 mm	Rmt	**76.00**
xii)	280 mm	Rmt	**86.00**
xiii)	315 mm	Rmt	**95.00**
xiv)	400 mm	Rmt	**105.00**
xv)	450 mm	Rmt	**114.00**
xvi)	500 mm	Rmt	**125.00**
xvii)	560 mm	Rmt	**136.00**
xviii)	630 mm	Rmt	**149.00**

Sr No	Item Description	Unit	Rate (in Rs.)
5	**Hydraulic testing of PVC pipe line** to specified pressure including cost of all materials and labour and water for testing for specified length including cutting, placing end cap making arrangement for filling safe water using reciprocating type pumps which should be able to provide specified test pressure gauges and other necessary equipments, labour,operation charges, etc. required for testing. The rate under this item shall also include cost of retesting, if necessary and reinstating to original position.		
a)	**Working Pressure 4 Kg./Sq.cm.**		
i)	63 mm	Km	**2255.00**
ii)	75 mm	Km	**2255.00**
iii)	90 mm	Km	**3383.00**
iv)	110 mm	Km	**3383.00**
v)	125 mm	Rmt	**3947.00**
vi)	140 mm	Km	**4510.00**
vii)	160 mm	Km	**4510.00**
viii)	180 mm	Km	**5638.00**
ix)	200 mm	Km	**5638.00**
x)	225 mm	Km	**6765.00**
xi)	250 mm	Km	**6765.00**
xii)	280 mm	Km	**7893.00**
xiii)	315 mm	Km	**9020.00**
b)	**Working Pressure 6 to 12.5 Kg./Sq.cm.**		
i)	63 mm	Km	**2255.00**
ii)	75 mm	Km	**3383.00**
iii)	90 mm	Km	**4510.00**
iv)	110 mm	Km	**4510.00**
v)	125 mm	Km	**5074.00**
vi)	140 mm	Km	**5638.00**
vii)	160 mm	Km	**5638.00**
viii)	180 mm	Km	**6765.00**
ix)	200 mm	Km	**6765.00**
x)	225 mm	Km	**7893.00**
xi)	250 mm	Km	**7893.00**
xii)	280 mm	Km	**9020.00**
xiii)	315 mm	Km	**10148.00**
xiv)	400 mm	Km	**10148.00**
xv)	450 mm	Km	**11275.00**
xvi)	500 mm	Km	**11275.00**
xvii)	560 mm	Km	**12403.00**
xviii)	630 mm	Km	**13530.00**

Sr No	Item Description	Unit	Rate (in Rs.)

1) Only 85% rate for lowering laying& jointing shall be payable till satisfactory hydraulic testing is given.

2) Third party inspecting agency shall invariably carry out.

I) Specific Gravity Test.

II) Weight / Rmt.

III) Ash Content Test and confirm in writing that those are within prescribed limits. This condition shall appear in tender conditions.

3) After receipt of pipes at site, concerned Deputy Engineer shall confirm that weight of pipe for every class and diameter is not less than the prescribed standard weight as per IS-4985/1988 (Which is given in CSR), Under weight pipes shall be rejected.

Above conditions shall appear in tender conditions

Section - I- (III) - G.I. PIPES

Sr No	Item Description	Unit	Rate (in Rs.) 2019-2020
1	**Providing ISI mark G.I. pipe** of following class and dia.excluding GST levied by GOI and GOM in all respect including inspection charges, transportation to stores, etc.complete as per IS-1239/2004.		
	Note : One coupler shall be provided with each full length of pipe cost of which is included in rates below.		
a)	**LIGHT**		
i)	15 mm. (0.96 kg./m)	Rmt	**64.00**
ii)	20 mm. (1.42 kg./m)	Rmt	**95.00**
iii)	25 mm. (2.03 kg./m)	Rmt	**130.00**
iv)	32 mm. (2.61 kg./m)	Rmt	**165.00**
v)	40 mm. (3.29 kg./m)	Rmt	**207.00**
vi)	50 mm. (4.18 kg./m)	Rmt	**253.00**
vii)	65 mm. (5.92 kg./m)	Rmt	**348.00**
viii)	80 mm. (6.98 kg./m)	Rmt	**418.00**
ix)	100 mm. (10.20 kg./m)	Rmt	**593.00**
b)	**MEDIUM**		
i)	15 mm. (1.23 kg./m)	Rmt	**76.00**
ii)	20 mm. (1.59 kg./m)	Rmt	**98.00**
iii)	25 mm. (2.40 kg./m)	Rmt	**150.00**
iv)	32 mm. (3.17 kg./m)	Rmt	**188.00**
v)	40 mm. (3.65 kg./m)	Rmt	**217.00**
vi)	50 mm. (5.16 kg./m)	Rmt	**300.00**
vii)	65 mm. (6.63 kg./m)	Rmt	**381.00**
viii)	80 mm. (8.64 kg./m)	Rmt	**501.00**
ix)	100 mm. (12.40 kg./m)	Rmt	**714.00**
x).	125 mm (16.70 kg/m)	Rmt	**972.00**
xi)	150 mm.(19.70 kg./m)	Rmt	**1143.00**
c)	**HEAVY**		
i)	15 mm.	Rmt	**87.00**
ii)	20 mm.	Rmt	**112.00**
iii)	25 mm.	Rmt	**175.00**
iv)	32 mm.	Rmt	**222.00**
v)	40 mm.	Rmt	**257.00**
vi)	50 mm.	Rmt	**356.00**
vii)	65 mm.	Rmt	**458.00**
viii)	80 mm.	Rmt	**585.00**
ix)	100 mm (14.70 kg./m)	Rmt	**845.00**
x).	125 mm (18.30 kg/m)	Rmt	**1046.00**
xi)	150 mm (21.80 kg./m)	Rmt	**1257.00**

Sr No	Item Description	Unit	Rate (in Rs.)
2	**Lowering, laying and jointing G. I. pipes and specials** of following class and diameter including conveyance from stores to site of works, all labour, etc. complete either underground or in vertical position, as directed by Engineer-in-charge		
a)	**LIGHT**		
i)	15 mm. (0.96 kg./m)	Rmt	**26.00**
ii)	20 mm. (1.42 kg./m)	Rmt	**29.00**
iii)	25 mm. (2.03 kg./m)	Rmt	**36.00**
iv)	32 mm. (2.61 kg./m)	Rmt	**41.00**
v)	40 mm. (3.29 kg./m)	Rmt	**50.00**
vi)	50 mm. (4.18 kg./m)	Rmt	**61.00**
vii)	65 mm. (5.92 kg./m)	Rmt	**88.00**
viii)	80 mm. (6.98 kg./m)	Rmt	**97.00**
ix)	100 mm. (10.20 kg./m)	Rmt	**117.00**
b)	**MEDIUM**		
i)	15 mm. (1.23 kg./m)	Rmt	**28.00**
ii)	20 mm. (1.59 kg./m)	Rmt	**31.00**
iii)	25 mm. (2.40 kg./m)	Rmt	**37.00**
iv)	32 mm. (3.17 kg./m)	Rmt	**43.00**
v)	40 mm. (3.65 kg./m)	Rmt	**56.00**
vi)	50 mm. (5.16 kg./m)	Rmt	**65.00**
vii)	65 mm. (6.63 kg./m)	Rmt	**95.00**
viii)	80 mm. (8.64 kg./m)	Rmt	**107.00**
ix)	100 mm. (12.40 kg./m)	Rmt	**117.00**
x)	125 mm (16.70 kg/m)	Rmt	**125.00**
xi)	150 mm.(19.70 kg./m)	Rmt	**131.00**
c)	**HEAVY**		
i)	15 mm.	Rmt	**30.00**
ii)	20 mm.	Rmt	**34.00**
iii)	25 mm.	Rmt	**40.00**
iv)	32 mm.	Rmt	**46.00**
v)	40 mm.	Rmt	**59.00**
vi)	50 mm.	Rmt	**74.00**
vii)	65 mm.	Rmt	**103.00**
viii)	80 mm.	Rmt	**125.00**
ix)	100 mm (14.70 kg./m)	Rmt	**117.00**
x)	125 mm (18.30 kg/m)	Rmt	**130.00**
xi)	150 mm (21.80 kg./m)	Rmt	**140.00**
	Note : Only 85% Payment shall be payable till satisfactory hydraulic testing is given		

Sr No	Item Description	Unit	Rate (in Rs.)
3	**Hydraulic testing of G. I. pipe line** to specified pressure including cost of all materials and labour and water for testing for the length upto 1km using reciprocating type pumps which should be able to provide specified test pressure gauges and other necessary equipments,labour operation charges etc. required for testing, The rates under this item shall also include cost of retesting if necessary and reinstating to original postion.		
a)	**LIGHT**		
i)	15 mm. (0.96 kg./m)	Km	**2255.00**
ii)	20 mm. (1.42 kg./m)	Km	**3383.00**
iii)	25 mm. (2.03 kg./m)	Km	**3383.00**
iv)	32 mm. (2.61 kg./m)	Km	**4510.00**
v)	40 mm. (3.29 kg./m)	Km	**5638.00**
vi)	50 mm. (4.18 kg./m)	Km	**6765.00**
vii)	65 mm. (5.92 kg./m)	Km	**10148.00**
viii)	80 mm. (6.98 kg./m)	Km	**11275.00**
ix)	100 mm. (10.20 kg./m)	Km	**12403.00**
b)	**MEDIUM**		
i)	15 mm. (1.23 kg./m)	Km	**3383.00**
ii)	20 mm. (1.59 kg./m)	Km	**3383.00**
iii)	25 mm. (2.40 kg./m)	Km	**4510.00**
iv)	32 mm. (3.17 kg./m)	Km	**4510.00**
v)	40 mm. (3.65 kg./m)	Km	**5638.00**
vi)	50 mm. (5.16 kg./m)	Km	**6765.00**
vii)	65 mm. (6.63 kg./m)	Km	**10148.00**
viii)	80 mm. (8.64 kg./m)	Km	**11275.00**
ix)	100 mm. (12.40 kg./m)	Km	**12403.00**
x)	125 mm (16.70 kg/m)	Km	**13530.00**
xi)	150 mm.(19.70 kg./m)	Km	**14658.00**
c)	**HEAVY**		
i)	15 mm.	Km	**3383.00**
ii)	20 mm.	Km	**3383.00**
iii)	25 mm.	Km	**4510.00**
iv)	32 mm.	Km	**5638.00**
v)	40 mm.	Km	**6765.00**
vi)	50 mm.	Km	**7893.00**
vii)	65 mm.	Km	**11275.00**
viii)	80 mm.	Km	**13530.00**
ix)	100 mm (14.70 kg./m)	Km	**12403.00**
x)	125 mm (18.30 kg/m)	Km	**14658.00**
xi)	150 mm (21.80 kg./m)	Km	**15785.00**

Section - I- (IV) - D.I Specials & Mechanical Joints			
Sr No	**Item Description**	**Unit**	**Rate (in Rs.) 2019-2020**
1	Providing and supplying **D.I. fitting with ISI mark socket pushon joints or flanged joints** confirming to table 12 to 31 of IS 9523/2000 upto latest amendments including cost of SBR/ EDPM tyton rings. Fittings should be with internally ordinary portland cement mortor lined and externally metallic zinc coating/zinc rich paint with finishing layer of black bitumen coating including transportation & excluding all statutary duties and taxes such as GST levied by GoI and GoM in all respect etc. complete.		
I	**Double socket bend 90 degree**		
1	80 mm	Nos	**1091.00**
2	100 mm	Nos	**1360.00**
3	150 mm	Nos	**2450.00**
4	200 mm	Nos	**3116.00**
5	250 mm	Nos	**5958.00**
6	300 mm	Nos	**8269.00**
7	350 mm	Nos	**11679.00**
8	400 mm	Nos	**15438.00**
9	450 mm	Nos	**20136.00**
10	500 mm	Nos	**25387.00**
11	600 mm	Nos	**41220.00**
12	700 mm	Nos	**64057.00**
II	**Double socket bend 45 degree**		
1	80 mm	Nos	**1010.00**
2	100 mm	Nos	**1225.00**
3	150 mm	Nos	**1895.00**
4	200 mm	Nos	**3221.00**
5	250 mm	Nos	**4533.00**
6	300 mm	Nos	**6347.00**
7	350 mm	Nos	**8726.00**
8	400 mm	Nos	**11410.00**
9	450 mm	Nos	**14497.00**
10	500 mm	Nos	**17840.00**
11	600 mm	Nos	**27171.00**
12	700 mm	Nos	**41503.00**
III	**Double socket bend 22.50 degree**		
1	80 mm	Nos	**884.00**
2	100 mm	Nos	**1136.00**
3	150 mm	Nos	**1761.00**
4	200 mm	Nos	**2718.00**
5	250 mm	Nos	**3691.00**
6	300 mm	Nos	**5440.00**
7	350 mm	Nos	**7174.00**
8	400 mm	Nos	**8898.00**
9	450 mm	Nos	**11410.00**
10	500 mm	Nos	**13997.00**

Sr No	Item Description	Unit	Rate (in Rs.) 2019-2020
11	600 mm	Nos	**21681.00**
12	700 mm	Nos	**32549.00**
IV	**Double socket bend 11.25 degree**		
1	80 mm	Nos	**884.00**
2	100 mm	Nos	**1091.00**
3	150 mm	Nos	**1628.00**
4	200 mm	Nos	**2584.00**
5	250 mm	Nos	**3581.00**
6	300 mm	Nos	**4823.00**
7	350 mm	Nos	**5720.00**
8	400 mm	Nos	**7718.00**
9	450 mm	Nos	**10202.00**
10	500 mm	Nos	**12350.00**
11	600 mm	Nos	**18114.00**
12	700 mm	Nos	**26156.00**
V	**Double socket concentric reducer**		
	100 x 80 mm dia	Nos	**1010.00**
	150 x 80 mm dia	Nos	**1628.00**
	150 x 100 mm dia	Nos	**1761.00**
	200 x 80 mm dia	Nos	**2526.00**
	200 x 100 mm dia	Nos	**2526.00**
	200 x 150 mm dia	Nos	**2680.00**
	250 x 80 mm dia	Nos	**3497.00**
	250 x 100 mm dia	Nos	**3366.00**
	250 x 150 mm dia	Nos	**3713.00**
	250 x 200 mm dia	Nos	**3581.00**
	300 x 100 mm dia	Nos	**4921.00**
	300 x 150 mm dia	Nos	**5052.00**
	300 x 200 mm dia	Nos	**4957.00**
	300 x 250 mm dia	Nos	**4662.00**
	350 x 200 mm dia	Nos	**6900.00**
	350 x 250 mm dia	Nos	**6719.00**
	350 x 300 mm dia	Nos	**6628.00**
	400 x 200 mm dia	Nos	**9129.00**
	400 x 250 mm dia	Nos	**8322.00**
	400 x 300 mm dia	Nos	**8055.00**
	400 x 350 mm dia	Nos	**7174.00**
	450 x 350 mm dia	Nos	**9665.00**
	450 x 400 mm dia	Nos	**8898.00**
	500 x 350 mm dia	Nos	**13052.00**
	500 x 400 mm dia	Nos	**12350.00**
	500 x 450 mm dia	Nos	**11663.00**
	600 x 300 mm dia	Nos	**19760.00**
	600 x 350 mm dia	Nos	**20337.00**
	600 x 400 mm dia	Nos	**19211.00**
	600 x 450 mm dia	Nos	**18663.00**
	600 x 500 mm dia	Nos	**17015.00**
	700 x 450 mm dia	Nos	**32388.00**

Sr No	Item Description	Unit	Rate (in Rs.) 2019-2020
	700 x 500 mm dia	Nos	**28818.00**
	700 x 600 mm dia	Nos	**30697.00**
	800 x 600 mm dia	Nos	**40198.00**
	800 x 700 mm dia	Nos	**30141.00**
VI	**All Socket Tee**		
	80 x 80 mm dia	Nos	**1493.00**
	100 x 80 mm dia	Nos	**1761.00**
	100 x 100 mm dia	Nos	**1895.00**
	150 x 80 mm dia	Nos	**2526.00**
	150 x 100 mm dia	Nos	**2718.00**
	150 x 150 mm dia	Nos	**3121.00**
	200 x 80 mm dia	Nos	**3542.00**
	200 x 100 mm dia	Nos	**3809.00**
	200 x 150 mm dia	Nos	**4346.00**
	200 x 200 mm dia	Nos	**5055.00**
	250 x 80 mm dia	Nos	**4792.00**
	250 x 100 mm dia	Nos	**5091.00**
	250 x 150 mm dia	Nos	**5513.00**
	250 x 200 mm dia	Nos	**6476.00**
	250 x 250 mm dia	Nos	**7383.00**
	300 x 80 mm dia	Nos	**6068.00**
	300 x 100 mm dia	Nos	**6201.00**
	300 x 150 mm dia	Nos	**7447.00**
	300 x 200 mm dia	Nos	**8269.00**
	300 x 250 mm dia	Nos	**9067.00**
	300 x 300 mm dia	Nos	**10102.00**
	350 x 80 mm dia	Nos	**7785.00**
	350 x 100 mm dia	Nos	**7920.00**
	350 x 150 mm dia	Nos	**9129.00**
	350 x 200 mm dia	Nos	**10067.00**
	350 x 250 mm dia	Nos	**12082.00**
	350 x 300 mm dia	Nos	**13424.00**
	350 x 350 mm dia	Nos	**13692.00**
	400 x 80 mm dia	Nos	**9800.00**
	400 x 100 mm dia	Nos	**9665.00**
	400 x 150 mm dia	Nos	**12082.00**
	400 x 200 mm dia	Nos	**12350.00**
	400 x 250 mm dia	Nos	**14095.00**
	400 x 300 mm dia	Nos	**15797.00**
	400 x 400 mm dia	Nos	**17452.00**
	450 x 100 mm dia	Nos	**12082.00**
	450 x 150 mm dia	Nos	**14095.00**
	450 x 200 mm dia	Nos	**15438.00**
	450 x 250 mm dia	Nos	**16070.00**
	450 x 300 mm dia	Nos	**17977.00**
	450 x 350 mm dia	Nos	**20136.00**
	450 x 400 mm dia	Nos	**22151.00**
	450 x 450 mm dia	Nos	**22553.00**

Sr No	Item Description	Unit	Rate (in Rs.) 2019-2020
	500 x 100 mm dia	Nos	**14743.00**
	500 x 150 mm dia	Nos	**17153.00**
	500 x 200 mm dia	Nos	**17840.00**
	500 x 250 mm dia	Nos	**20583.00**
	500 x 300 mm dia	Nos	**21957.00**
	500 x 400 mm dia	Nos	**25387.00**
VII	**Double Socket Tee with Flange branch-PN-10**		
	80 x 80 mm dia	Nos	**1854.00**
	100 x 80 mm dia	Nos	**1986.00**
	100 x 100 mm dia	Nos	**2118.00**
	150 x 80 mm dia	Nos	**2780.00**
	150 x 100 mm dia	Nos	**2846.00**
	150 x 150 mm dia	Nos	**3574.00**
	200 x 80 mm dia	Nos	**3838.00**
	200 x 100 mm dia	Nos	**4102.00**
	200 x 150 mm dia	Nos	**4765.00**
	200 x 200 mm dia	Nos	**5493.00**
	250 x 80 mm dia	Nos	**5020.00**
	250 x 100 mm dia	Nos	**5089.00**
	250 x 150 mm dia	Nos	**6241.00**
	250 x 200 mm dia	Nos	**7055.00**
	250 x 250 mm dia	Nos	**8141.00**
	300 x 80 mm dia	Nos	**6513.00**
	300 x 100 mm dia	Nos	**6785.00**
	300 x 150 mm dia	Nos	**7734.00**
	300 x 200 mm dia	Nos	**8820.00**
	300 x 250 mm dia	Nos	**10042.00**
	300 x 300 mm dia	Nos	**10855.00**
	350 x 80 mm dia	Nos	**8155.00**
	350 x 100 mm dia	Nos	**8297.00**
	350 x 150 mm dia	Nos	**9843.00**
	350 x 200 mm dia	Nos	**10688.00**
	350 x 250 mm dia	Nos	**12658.00**
	350 x 300 mm dia	Nos	**15469.00**
	350 x 350 mm dia	Nos	**16031.00**
	400 x 80 mm dia	Nos	**9843.00**
	400 x 100 mm dia	Nos	**10266.00**
	400 x 150 mm dia	Nos	**11251.00**
	400 x 200 mm dia	Nos	**12938.00**
	400 x 250 mm dia	Nos	**15469.00**
	400 x 300 mm dia	Nos	**16031.00**
	400 x 400 mm dia	Nos	**20392.00**
	450 x 80 mm dia	Nos	**12235.00**
	450 x 100 mm dia	Nos	**12375.00**
	450 x 150 mm dia	Nos	**13782.00**
	450 x 200 mm dia	Nos	**15188.00**
	450 x 250 mm dia	Nos	**16876.00**
	450 x 300 mm dia	Nos	**18845.00**

Sr No	Item Description	Unit	Rate (in Rs.) 2019-2020
	450 x 350 mm dia	Nos	**23907.00**
	450 x 400 mm dia	Nos	**24049.00**
	450 x 450 mm dia	Nos	**24486.00**
	500 x 80 mm dia	Nos	**14663.00**
	500 x 100 mm dia	Nos	**14807.00**
	500 x 150 mm dia	Nos	**17683.00**
	500 x 200 mm dia	Nos	**18114.00**
	500 x 250 mm dia	Nos	**21563.00**
	500 x 300 mm dia	Nos	**22139.00**
	500 x 400 mm dia	Nos	**26021.00**
VIII	**Flange Socket-PN-10**		
	80 mm dia	Nos	**953.00**
	100 mm dia	Nos	**1071.00**
	150 mm dia	Nos	**1668.00**
	200 mm dia	Nos	**2499.00**
	250 mm dia	Nos	**3287.00**
	300 mm dia	Nos	**4314.00**
	350 mm dia	Nos	**5568.00**
	400 mm dia	Nos	**6834.00**
	450 mm dia	Nos	**7657.00**
	500 mm dia	Nos	**9316.00**
	600 mm dia	Nos	**13586.00**
	700 mm dia	Nos	**23478.00**
IX	**Flange Spigot-PN-10**		
	80 mm dia	Nos	**939.00**
	100 mm dia	Nos	**1183.00**
	150 mm dia	Nos	**1895.00**
	200 mm dia	Nos	**2720.00**
	250 mm dia	Nos	**3839.00**
	300 mm dia	Nos	**4908.00**
	350 mm dia	Nos	**7214.00**
	400 mm dia	Nos	**8227.00**
	450 mm dia	Nos	**10504.00**
	500 mm dia	Nos	**9636.00**
	600 mm dia	Nos	**20184.00**
	700 mm dia	Nos	**30419.00**
X	**Blank Flange -PN-10**		
	80 mm dia	Nos	**488.00**
	100 mm dia	Nos	**590.00**
	150 mm dia	Nos	**976.00**
	200 mm dia	Nos	**1342.00**
	250 mm dia	Nos	**2126.00**
	300 mm dia	Nos	**3053.00**
	350 mm dia	Nos	**4363.00**
	400 mm dia	Nos	**5420.00**
	450 mm dia	Nos	**7403.00**
	500 mm dia	Nos	**8775.00**
	600 mm dia	Nos	**12691.00**

Sr No	Item Description	Unit	Rate (in Rs.) 2019-2020
	700 mm dia	Nos	**26399.00**
XI	**Double Flange Bend 90 Deg -PN-`10**		
	80 mm dia	Nos	**1166.00**
	100 mm dia	Nos	**1399.00**
	150 mm dia	Nos	**2518.00**
	200 mm dia	Nos	**3670.00**
	250 mm dia	Nos	**6524.00**
	300 mm dia	Nos	**8827.00**
	350 mm dia	Nos	**11610.00**
	400 mm dia	Nos	**14890.00**
	450 mm dia	Nos	**21453.00**
	500 mm dia	Nos	**23713.00**
	600 mm dia	Nos	**38148.00**
	700 mm dia	Nos	**73097.00**
XII	**Double Flange Bend 45 Deg -PN-10**		
	80 mm dia	Nos	**1107.00**
	100 mm dia	Nos	**1399.00**
	150 mm dia	Nos	**2214.00**
	200 mm dia	Nos	**3206.00**
	250 mm dia	Nos	**4879.00**
	300 mm dia	Nos	**9171.00**
	350 mm dia	Nos	**9717.00**
	400 mm dia	Nos	**12367.00**
	450 mm dia	Nos	**15142.00**
	500 mm dia	Nos	**23807.00**
	600 mm dia	Nos	**35402.00**
	700 mm dia	Nos	**50503.00**
XIII	**Double Flange Duck Foot Bend -PN-10**		
	80 mm dia	Nos	**1790.00**
	100 mm dia	Nos	**2237.00**
	150 mm dia	Nos	**3858.00**
	200 mm dia	Nos	**6054.00**
	250 mm dia	Nos	**9674.00**
	300 mm dia	Nos	**13458.00**
	350 mm dia	Nos	**19622.00**
	400 mm dia	Nos	**24229.00**
	450 mm dia	Nos	**34322.00**
	500 mm dia	Nos	**43712.00**
	600 mm dia	Nos	**61216.00**
	700 mm dia	Nos	**106913.00**
XIV	**All Flange Tee -PN-10**		
	80 x 80 mm dia	Nos	**1865.00**
	100 x 80 mm dia	Nos	**2098.00**
	100 x 100 mm dia	Nos	**2214.00**
	150 x 80 mm dia	Nos	**3263.00**
	150 x 100 mm dia	Nos	**3380.00**
	150 x 150 mm dia	Nos	**3730.00**
	200 x 80 mm dia	Nos	**4779.00**

Sr No	Item Description	Unit	Rate (in Rs.) 2019-2020
	200 x 100 mm dia	Nos	**5036.00**
	200 x 150 mm dia	Nos	**5246.00**
	200 x 200 mm dia	Nos	**5712.00**
	250 x 80 mm dia	Nos	**6486.00**
	250 x 100 mm dia	Nos	**7762.00**
	250 x 150 mm dia	Nos	**7362.00**
	250 x 200 mm dia	Nos	**9075.00**
	250 x 250 mm dia	Nos	**9195.00**
	300 x 80 mm dia	Nos	**7777.00**
	300 x 100 mm dia	Nos	**10340.00**
	300 x 150 mm dia	Nos	**9080.00**
	300 x 200 mm dia	Nos	**11343.00**
	300 x 250 mm dia	Nos	**11109.00**
	300 x 300 mm dia	Nos	**13494.00**
	350 x 80 mm dia	Nos	**11505.00**
	350 x 100 mm dia	Nos	**14133.00**
	350 x 150 mm dia	Nos	**13190.00**
	350 x 200 mm dia	Nos	**14839.00**
	350 x 250 mm dia	Nos	**15960.00**
	350 x 300 mm dia	Nos	**17285.00**
	350 x 350 mm dia	Nos	**19306.00**
	400 x 80 mm dia	Nos	**13837.00**
	400 x 100 mm dia	Nos	**17585.00**
	400 x 150 mm dia	Nos	**15797.00**
	400 x 200 mm dia	Nos	**18297.00**
	400 x 250 mm dia	Nos	**19064.00**
	400 x 300 mm dia	Nos	**19937.00**
	400 x 400 mm dia	Nos	**21453.00**
	450 x 100 mm dia	Nos	**22343.00**
	450 x 150 mm dia	Nos	**17883.00**
	450 x 200 mm dia	Nos	**23471.00**
	450 x 250 mm dia	Nos	**21179.00**
	450 x 300 mm dia	Nos	**22012.00**
	450 x 350 mm dia	Nos	**25237.00**
	450 x 400 mm dia	Nos	**25170.00**
	450 x 450 mm dia	Nos	**28393.00**
	500 x 100 mm dia	Nos	**27064.00**
	500 x 150 mm dia	Nos	**27450.00**
	500 x 200 mm dia	Nos	**27708.00**
	500 x 250 mm dia	Nos	**28352.00**
	500 x 300 mm dia	Nos	**34018.00**
	500 x 400 mm dia	Nos	**34520.00**
	500 x 500 mm dia	Nos	**37614.00**
	600 x 100 mm dia	Nos	**44678.00**
	600 x 150 mm dia	Nos	**45141.00**
	600 x 200 mm dia	Nos	**44779.00**
	600 x 250 mm dia	Nos	**47941.00**
	600 x 300 mm dia	Nos	**46467.00**

Sr No	Item Description	Unit	Rate (in Rs.) 2019-2020
	600 x 400 mm dia	Nos	**48275.00**
	600 x 500 mm dia	Nos	**48312.00**
	600 x 600 mm dia	Nos	**53406.00**
XV	**Double Socket Level Invert Flange Branch Tee PN10**		
	200 x 80 mm dia	Nos	**3334.00**
	250 x 80 mm dia	Nos	**4347.00**
	300 x 80 mm dia	Nos	**5802.00**
	350 x 80 mm dia	Nos	**7249.00**
	350 x 100 mm dia	Nos	**7926.00**
	400 x 100 mm dia	Nos	**9478.00**
	450 x 80 mm dia	Nos	**11522.00**
	450 x 100 mm dia	Nos	**11766.00**
	500 x 80 mm dia	Nos	**13214.00**
	500 x 100 mm dia	Nos	**14464.00**
XVI	**Cap**		
	80 mm dia	Nos	**445.00**
	100 mm dia	Nos	**573.00**
	150 mm dia	Nos	**1017.00**
	200 mm dia	Nos	**1812.00**
	250 mm dia	Nos	**2179.00**
	300 mm dia	Nos	**3435.00**
	350 mm dia	Nos	**5557.00**
	400 mm dia	Nos	**7249.00**
	450 mm dia	Nos	**9181.00**
	500 mm dia	Nos	**11238.00**
	600 mm dia	Nos	**15684.00**
	700 mm dia	Nos	**27827.00**
XVII	**Plug**		
	80 mm dia	Nos	**326.00**
	100 mm dia	Nos	**557.00**
	150 mm dia	Nos	**989.00**
	200 mm dia	Nos	**1531.00**
	250 mm dia	Nos	**2118.00**
	300 mm dia	Nos	**3339.00**
	350 mm dia	Nos	**5315.00**
	400 mm dia	Nos	**6282.00**
	450 mm dia	Nos	**8318.00**
	500 mm dia	Nos	**10127.00**
	600 mm dia	Nos	**14995.00**

Sr No	Item Description	Unit	Rate (in Rs.) 2019-2020
	D.I. FITTINGS (Mechanical Joints)		
11	Providing and supplying **D.I. fittings** with ISI mark **Mechanical joint** confirming to tables 12 to table 31 of IS 9523/2000 upto latest amendments including cost of SBR/ EDPM gaskets, Nuts, Bolts, Washers and Ductile iron follower glands. Fittings should be with internally Ordinary portland cement mortor lined and externally metallic zinc coating/zinc rich paint with finishing layer of black bitumen coating including transportation and all taxes etc. complete.		
I)	**MJ Collar/Coupling**		
	80 mm dia	Nos	**2098.00**
	100 mm dia	Nos	**2292.00**
	150 mm dia	Nos	**2805.00**
	200 mm dia	Nos	**5015.00**
	250 mm dia	Nos	**6635.00**
	300 mm dia	Nos	**8600.00**
	350 mm dia	Nos	**12167.00**
	400 mm dia	Nos	**15223.00**
	450 mm dia	Nos	**17619.00**
	500 mm dia	Nos	**22771.00**
	600 mm dia	Nos	**28761.00**
	700 mm dia	Nos	**39467.00**
II)	**Double socket Bend 90 Deg**		
	80 mm dia	Nos	**1126.00**
	100 mm dia	Nos	**1418.00**
	150 mm dia	Nos	**2445.00**
	200 mm dia	Nos	**3669.00**
	250 mm dia	Nos	**5200.00**
	300 mm dia	Nos	**6949.00**
	350 mm dia	Nos	**10114.00**
	400 mm dia	Nos	**13023.00**
	450 mm dia	Nos	**16844.00**
	500 mm dia	Nos	**19211.00**
	600 mm dia	Nos	**28060.00**
III)	**Double socket Bend 45 Deg**		
	80 mm dia	Nos	**1126.00**
	100 mm dia	Nos	**1320.00**
	150 mm dia	Nos	**2066.00**
	200 mm dia	Nos	**3154.00**
	250 mm dia	Nos	**4242.00**
	300 mm dia	Nos	**5930.00**
	350 mm dia	Nos	**8819.00**
	400 mm dia	Nos	**11254.00**
	450 mm dia	Nos	**12867.00**
	500 mm dia	Nos	**14987.00**
	600 mm dia	Nos	**21524.00**

Sr No	Item Description	Unit	Rate (in Rs.) 2019-2020
IV)	**Double socket Bend 22.5 Deg**		
	80 mm dia	Nos	**1040.00**
	100 mm dia	Nos	**1320.00**
	150 mm dia	Nos	**1980.00**
	200 mm dia	Nos	**2825.00**
	250 mm dia	Nos	**3766.00**
	300 mm dia	Nos	**5270.00**
	350 mm dia	Nos	**7629.00**
	400 mm dia	Nos	**9306.00**
	450 mm dia	Nos	**11687.00**
	500 mm dia	Nos	**13950.00**
	600 mm dia	Nos	**18015.00**
V)	**Double socket Bend 11.25 Deg**		
	80 mm dia	Nos	**1040.00**
	100 mm dia	Nos	**1365.00**
	150 mm dia	Nos	**1883.00**
	200 mm dia	Nos	**2727.00**
	250 mm dia	Nos	**3582.00**
	300 mm dia	Nos	**4805.00**
	350 mm dia	Nos	**6601.00**
	400 mm dia	Nos	**8495.00**
	450 mm dia	Nos	**11002.00**
	500 mm dia	Nos	**13148.00**
	600 mm dia	Nos	**16341.00**
VI)	**Double Socket Concentric Reducer**		
	100 x 80 mm dia	Nos	**1853.00**
	150 x 80 mm dia	Nos	**2670.00**
	150 x 100 mm dia	Nos	**2910.00**
	200 x 80 mm dia	Nos	**3757.00**
	200 x 100 mm dia	Nos	**3770.00**
	200 x 150 mm dia	Nos	**4194.00**
	250 x 80 mm dia	Nos	**4913.00**
	250 x 100 mm dia	Nos	**5136.00**
	250 x 150 mm dia	Nos	**5475.00**
	250 x 200 mm dia	Nos	**5475.00**
	300 x 100 mm dia	Nos	**6810.00**
	300 x 150 mm dia	Nos	**7145.00**
	300 x 200 mm dia	Nos	**6867.00**
	300 x 250 mm dia	Nos	**7369.00**
	350 x 200 mm dia	Nos	**10379.00**
	350 x 300 mm dia	Nos	**10798.00**
	400 x 200 mm dia	Nos	**12868.00**
	400 x 300 mm dia	Nos	**13111.00**
	400 x 350 mm dia	Nos	**12328.00**
	450 x 400 mm dia	Nos	**14965.00**
	500 x 300 mm dia	Nos	**19980.00**
	500 x 350 mm dia	Nos	**18540.00**
	500 x 400 mm dia	Nos	**18290.00**

Sr No	Item Description	Unit	Rate (in Rs.) 2019-2020
	600 x 350 mm dia	Nos	**25707.00**
	600 x 400 mm dia	Nos	**25430.00**
	600 x 500 mm dia	Nos	**23674.00**
VII)	**All Socket Tee**		
	80 x 80 mm dia	Nos	**2518.00**
	100 x 80 mm dia	Nos	**2959.00**
	100 x 100 mm dia	Nos	**3180.00**
	150 x 80 mm dia	Nos	**4285.00**
	150 x 100 mm dia	Nos	**4507.00**
	150 x 150 mm dia	Nos	**5186.00**
	200 x 80 mm dia	Nos	**5577.00**
	200 x 100 mm dia	Nos	**5986.00**
	200 x 150 mm dia	Nos	**6802.00**
	200 x 200 mm dia	Nos	**7952.00**
	250 x 80 mm dia	Nos	**7244.00**
	250 x 100 mm dia	Nos	**7619.00**
	250 x 150 mm dia	Nos	**8281.00**
	250 x 200 mm dia	Nos	**9625.00**
	250 x 250 mm dia	Nos	**10645.00**
	300 x 80 mm dia	Nos	**9167.00**
	300 x 100 mm dia	Nos	**9387.00**
	300 x 150 mm dia	Nos	**10952.00**
	300 x 200 mm dia	Nos	**11989.00**
	300 x 250 mm dia	Nos	**13314.00**
	300 x 300 mm dia	Nos	**14505.00**
	350 x 80 mm dia	Nos	**13179.00**
	350 x 100 mm dia	Nos	**13434.00**
	350 x 150 mm dia	Nos	**14965.00**
	350 x 200 mm dia	Nos	**16154.00**
	350 x 250 mm dia	Nos	**18791.00**
	350 x 300 mm dia	Nos	**20831.00**
	350 x 350 mm dia	Nos	**22192.00**
	400 x 80 mm dia	Nos	**16835.00**
	400 x 100 mm dia	Nos	**16750.00**
	400 x 150 mm dia	Nos	**19705.00**
	400 x 200 mm dia	Nos	**20319.00**
	400 x 250 mm dia	Nos	**22021.00**
	400 x 300 mm dia	Nos	**23978.00**
	400 x 400 mm dia	Nos	**28143.00**
	450 x 100 mm dia	Nos	**20342.00**
	450 x 150 mm dia	Nos	**23038.00**
	450 x 200 mm dia	Nos	**23528.00**
	450 x 250 mm dia	Nos	**24658.00**
	450 x 300 mm dia	Nos	**27123.00**
	450 x 350 mm dia	Nos	**32352.00**
	450 x 400 mm dia	Nos	**32995.00**
	450 x 450 mm dia	Nos	**34181.00**
	500 x 100 mm dia	Nos	**21295.00**
	500 x 150 mm dia	Nos	**24426.00**

Sr No	Item Description	Unit	Rate (in Rs.) 2019-2020
	500 x 200 mm dia	Nos	**24928.00**
	500 x 250 mm dia	Nos	**29993.00**
	500 x 300 mm dia	Nos	**30940.00**
	500 x 400 mm dia	Nos	**34573.00**
VIII)	**Double Socket Tee with Flange Branch - PN-10**		
	80 x 80 mm dia	Nos	**2746.00**
	100 x 80 mm dia	Nos	**3228.00**
	100 x 100 mm dia	Nos	**3469.00**
	150 x 80 mm dia	Nos	**4675.00**
	150 x 100 mm dia	Nos	**4916.00**
	150 x 150 mm dia	Nos	**5657.00**
	200 x 80 mm dia	Nos	**6084.00**
	200 x 100 mm dia	Nos	**6530.00**
	200 x 150 mm dia	Nos	**7420.00**
	200 x 200 mm dia	Nos	**8675.00**
	250 x 80 mm dia	Nos	**7903.00**
	250 x 100 mm dia	Nos	**8311.00**
	250 x 150 mm dia	Nos	**9034.00**
	250 x 200 mm dia	Nos	**10500.00**
	250 x 250 mm dia	Nos	**11613.00**
	300 x 80 mm dia	Nos	**9999.00**
	300 x 100 mm dia	Nos	**10240.00**
	300 x 150 mm dia	Nos	**11947.00**
	300 x 200 mm dia	Nos	**13078.00**
	300 x 250 mm dia	Nos	**14525.00**
	300 x 300 mm dia	Nos	**15824.00**
	350 x 80 mm dia	Nos	**14377.00**
	350 x 100 mm dia	Nos	**14655.00**
	350 x 150 mm dia	Nos	**16324.00**
	350 x 200 mm dia	Nos	**17623.00**
	350 x 250 mm dia	Nos	**20499.00**
	350 x 300 mm dia	Nos	**22724.00**
	350 x 350 mm dia	Nos	**24209.00**
	400 x 80 mm dia	Nos	**18334.00**
	400 x 100 mm dia	Nos	**18272.00**
	400 x 150 mm dia	Nos	**21497.00**
	400 x 200 mm dia	Nos	**22166.00**
	400 x 250 mm dia	Nos	**24023.00**
	400 x 300 mm dia	Nos	**26158.00**
	400 x 400 mm dia	Nos	**30702.00**
	450 x 80 mm dia	Nos	**22191.00**
	450 x 100 mm dia	Nos	**25133.00**
	450 x 150 mm dia	Nos	**25668.00**
	450 x 200 mm dia	Nos	**26899.00**
	450 x 250 mm dia	Nos	**29589.00**
	450 x 300 mm dia	Nos	**35293.00**
	450 x 350 mm dia	Nos	**35995.00**
	450 x 400 mm dia	Nos	**37289.00**
	450 x 450 mm dia	Nos	**23231.00**

Sr No	Item Description	Unit	Rate (in Rs.) 2019-2020
	500 x 80 mm dia	Nos	**26647.00**
	500 x 100 mm dia	Nos	**27194.00**
	500 x 150 mm dia	Nos	**32719.00**
	500 x 200 mm dia	Nos	**33753.00**
	500 x 250 mm dia	Nos	**37716.00**
	500 x 300 mm dia	Nos	**32124.00**
	500 x 400 mm dia	Nos	**36213.00**
	500 x 500 mm dia	Nos	**42500.00**
IX)	**Flanged Socket PN-10**		
	80 mm dia	Nos	**1452.00**
	100 mm dia	Nos	**1594.00**
	150 mm dia	Nos	**2417.00**
	200 mm dia	Nos	**3369.00**
	250 mm dia	Nos	**4642.00**
	300 mm dia	Nos	**6073.00**
	350 mm dia	Nos	**9016.00**
	400 mm dia	Nos	**10936.00**
	450 mm dia	Nos	**12270.00**
	500 mm dia	Nos	**14692.00**
	600 mm dia	Nos	**20452.00**

Section - I- (V) - R.C.C. PIPES

Sr No	Item Description	Unit	Rate (in Rs.) 2019-2020	
			Coller Joints	Rubber Ring
1	**Providing ISI standard R.C.C. pipes** in standard lengths of following class and diameter suitable for either collar joints or rubber ring joints, excluding GST levied by GOI & GOM in all respect including inspection charges, transport to departmental stores, unloading and stacking etc. complete as per IS-458/1988. **Note:** One collar should be supplied with each full length plain ended RCC pipe, cost of collar included in rates below. One rubber ring should be supplied with each full length of socketed pipe, cost included in rates below.			
a)	**Class " P-I "**			
i)	80 mm	Rmt	**272.00**	**240.00**
ii)	100 mm	Rmt	**284.00**	**258.00**
iii)	150 mm	Rmt	**300.00**	**266.00**
iv)	200 mm	Rmt	**348.00**	**312.00**
v)	225 mm	Rmt	**397.00**	**357.00**
vi)	250 mm	Rmt	**435.00**	**390.00**
vii)	300 mm	Rmt	**556.00**	**497.00**
viii)	350 mm	Rmt	**599.00**	**538.00**
ix)	400 mm	Rmt	**760.00**	**687.00**
x)	450 mm	Rmt	**935.00**	**844.00**
xi)	500 mm	Rmt	**1126.00**	**1013.00**
xii)	600 mm	Rmt	**1419.00**	**1280.00**
xiii)	700 mm	Rmt	**1849.00**	**1663.00**
xiv)	800 mm	Rmt	**2134.00**	**1919.00**
xv)	900 mm	Rmt	**2685.00**	**2417.00**
xvi)	1000 mm	Rmt	**3147.00**	**2834.00**
xvii)	1100 mm	Rmt	**3574.00**	**3218.00**
xviii)	1200 mm	Rmt	**4294.00**	**3869.00**
b)	**Class " P-II "**			
i)	80 mm	Rmt	**290.00**	**256.00**
ii)	100 mm	Rmt	**308.00**	**277.00**
iii)	150 mm	Rmt	**369.00**	**333.00**
iv)	200 mm	Rmt	**496.00**	**450.00**
v)	225 mm	Rmt	**588.00**	**530.00**
vi)	250 mm	Rmt	**637.00**	**579.00**
vii)	300 mm	Rmt	**841.00**	**802.00**
viii)	350 mm	Rmt	**1050.00**	**950.00**
ix)	400 mm	Rmt	**1171.00**	**1066.00**
x)	450 mm	Rmt	**1420.00**	**1274.00**

Sr No	Item Description	Unit	Rate (in Rs.) 2019-2020	
			Coller Joints	Rubber Ring
xi)	500 mm	Rmt	**1983.00**	**1807.00**
xii)	600 mm	Rmt	**2459.00**	**2217.00**
xiii)	700 mm	Rmt	**3350.00**	**3047.00**
xiv)	800 mm	Rmt	**4028.00**	**3671.00**
xv)	900 mm	Rmt	**4538.00**	**4572.00**
xvi)	1000 mm	Rmt	**5491.00**	**4944.00**
c)	**Class " P-III "**			
i)	80 mm	Rmt	**312.00**	**307.00**
ii)	100 mm	Rmt	**338.00**	**332.00**
iii)	150 mm	Rmt	**384.00**	**384.00**
iv)	200 mm	Rmt	**522.00**	**522.00**
v)	225 mm	Rmt	**622.00**	**622.00**
vi)	250 mm	Rmt	**728.00**	**727.00**
vii)	300 mm	Rmt	**1013.00**	**1012.00**
viii)	350 mm	Rmt	**1320.00**	**1320.00**
ix)	400 mm	Rmt	**1817.00**	**1817.00**
x)	450 mm	Rmt	**2112.00**	**2086.00**
xi)	500 mm	Rmt	**2545.00**	**2544.00**
xii)	600 mm	Rmt	**3268.00**	**3268.00**
xiii)	700 mm	Rmt	**4663.00**	**4662.00**
xiv)	800 mm	Rmt	**5921.00**	**5921.00**
d)	**Class " NP-II "**			
	(For 2.00 m. length)			
i)	80 mm	Rmt	**234.00**	**236.00**
ii)	100 mm	Rmt	**240.00**	**245.00**
iii)	150 mm	Rmt	**262.00**	**262.00**
iv)	200 mm	Rmt	**327.00**	**327.00**
v)	225 mm	Rmt	**366.00**	**373.00**
vi)	250 mm	Rmt	**394.00**	**402.00**
vii)	300 mm	Rmt	**510.00**	**510.00**
	(For 2.50 m. length)			
viii)	350 mm	Rmt	**644.00**	**657.00**
ix)	400 mm	Rmt	**743.00**	**743.00**
x)	450 mm	Rmt	**878.00**	**891.00**
xi)	500 mm	Rmt	**941.00**	**941.00**
xii)	600 mm	Rmt	**1188.00**	**1188.00**
xiii)	700 mm	Rmt	**1584.00**	**1584.00**
xiv)	800 mm	Rmt	**1782.00**	**1782.00**
xv)	900 mm	Rmt	**2277.00**	**2277.00**
xvi)	1000 mm	Rmt	**2772.00**	**2772.00**
xvii)	1100 mm	Rmt	**3780.00**	**3780.00**
xviii)	1200 mm	Rmt	**4512.00**	**4512.00**
xix)	1400 mm	Rmt	**5465.00**	**5574.00**

Sr No	Item Description	Unit	Rate (in Rs.) 2019-2020	
			Coller Joints	Rubber Ring
xx)	1600 mm	Rmt	**6275.00**	**6400.00**
xxi)	1800 mm	Rmt	**8789.00**	**8965.00**
e)	**Class " NP-III "**			
	(For 2.50 m. length)			
i)	80 mm	Rmt	**265.00**	**269.00**
ii)	100 mm	Rmt	**291.00**	**306.00**
iii)	150 mm	Rmt	**331.00**	**337.00**
iv)	200 mm	Rmt	**455.00**	**372.00**
v)	225 mm	Rmt	**510.00**	**434.00**
vi)	250 mm	Rmt	**540.00**	**510.00**
vii)	300 mm	Rmt	**701.00**	**714.00**
viii)	350 mm	Rmt	**1239.00**	**1188.00**
ix)	400 mm	Rmt	**1388.00**	**1267.00**
x)	450 mm	Rmt	**1651.00**	**1366.00**
xi)	500 mm	Rmt	**1833.00**	**1683.00**
xii)	600 mm	Rmt	**2415.00**	**1980.00**
xiii)	700 mm	Rmt	**3218.00**	**2772.00**
xiv)	800 mm	Rmt	**3911.00**	**2970.00**
xv)	900 mm	Rmt	**4518.00**	**3466.00**
xvi)	1000 mm	Rmt	**5148.00**	**3862.00**
xvii)	1100 mm	Rmt	**6394.00**	**6522.00**
xviii)	1200 mm	Rmt	**7435.00**	**7435.00**
xix)	1400 mm	Rmt	**8742.00**	**8742.00**
xx)	1600 mm	Rmt	**13135.00**	**13263.00**
xxi)	1800 mm	Rmt	**16233.00**	**16233.00**
f)	**Class " NP-IV "**			
i)	80 mm	Rmt	**285.00**	**290.00**
ii)	100 mm	Rmt	**334.00**	**340.00**
iii)	150 mm	Rmt	**378.00**	**386.00**
iv)	200 mm	Rmt	**528.00**	**421.00**
v)	225 mm	Rmt	**582.00**	**495.00**
vi)	250 mm	Rmt	**639.00**	**582.00**
vii)	300 mm	Rmt	**896.00**	**891.00**
viii)	350 mm	Rmt	**1361.00**	**1267.00**
ix)	400 mm	Rmt	**1457.00**	**1386.00**
x)	450 mm	Rmt	**1718.00**	**1485.00**
xi)	500 mm	Rmt	**2100.00**	**1832.00**
xii)	600 mm	Rmt	**2568.00**	**2376.00**
xiii)	700 mm	Rmt	**3844.00**	**2970.00**
xiv)	800 mm	Rmt	**4390.00**	**3218.00**
xv)	900 mm	Rmt	**5140.00**	**3763.00**
xvi)	1000 mm	Rmt	**7278.00**	**4159.00**
xvii)	1100 mm	Rmt	**7895.00**	**7981.00**
xviii)	1200 mm	Rmt	**7931.00**	**8089.00**

Sr No	Item Description	Unit	Rate (in Rs.) 2019-2020	
			Coller Joints	Rubber Ring
xix)	1400 mm	Rmt	**12383.00**	**11522.00**
xx)	1600 mm	Rmt	**15439.00**	**15481.00**
xxi)	1800 mm	Rmt	**21164.00**	**19980.00**
2	**Lowering, laying and jointing in proper grade and alignment R.C.C. pipes with collar joints** in C.M.1:1 proportion or socketed R.C.C. pipes with rubber joints (excluding cost of rubber ring or R.C.C. collar,) including cost of conveyance from stores to site of work, cost of jointing material, labour, etc. complete as directed by Engineerin-charge (For all class of pipes.) as per IS783-1985		**Collar Joint**	**Rubber ring Joint**
	For All class of pipes			
i)	80 mm	Rmt	**48.00**	**35.00**
ii)	100 mm	Rmt	**57.00**	**41.00**
iii)	150 mm	Rmt	**88.00**	**62.00**
iv)	200 mm	Rmt	**117.00**	**83.00**
v)	225 mm	Rmt	**136.00**	**96.00**
vi)	250 mm	Rmt	**153.00**	**107.00**
vii)	300 mm	Rmt	**185.00**	**130.00**
viii)	350 mm	Rmt	**189.00**	**133.00**
ix)	400 mm	Rmt	**241.00**	**171.00**
x)	450 mm	Rmt	**294.00**	**204.00**
xi)	500 mm	Rmt	**319.00**	**222.00**
xii)	600 mm	Rmt	**404.00**	**279.00**
xiii)	700 mm	Rmt	**457.00**	**317.00**
xiv)	800 mm	Rmt	**529.00**	**366.00**
xv)	900 mm	Rmt	**582.00**	**405.00**
xvi)	1000 mm	Rmt	**637.00**	**443.00**
xvii)	1100 mm	Rmt	**886.00**	**600.00**
xviii)	1200 mm	Rmt	**939.00**	**638.00**
xix)	1400 mm	Rmt	**1046.00**	**716.00**
xx)	1600 mm	Rmt	**1154.00**	**793.00**
xxi)	1800 mm	Rmt	**1262.00**	**869.00**

Note: Only 85% rate shall be payable till satisfactory hydraulic testing is given.

Sr No	Item Description	Unit	Rate (in Rs.) 2019-2020	
			Coller Joints	Rubber Ring
3	**Hydraulic testing of RCC pipe line** to specified pressure including cost of all materials and labour and water for testing for specified length including cutting, placing end cap making arrangement for filling safe water using reciprocating type pumps which should be able to provide specified test pressure gauges and other necessary equipments, labour, operation charges, etc. required for testing. The rate under this item shall also include cost of retesting, if necessary and reinstating to original position.		**Collar Joint**	**Rubber ring Joint**
	For All class of pipes			
i)	80 mm	Km	**5638.00**	**3383.00**
ii)	100 mm	Km	**6765.00**	**4510.00**
iii)	150 mm	Km	**10148.00**	**6765.00**
iv)	200 mm	Km	**12403.00**	**9020.00**
v)	225 mm	Km	**14658.00**	**10148.00**
vi)	250 mm	Km	**16913.00**	**12403.00**
vii)	300 mm	Km	**20295.00**	**14658.00**
viii)	350 mm	Km	**21423.00**	**14658.00**
ix)	400 mm	Km	**27060.00**	**19168.00**
x)	450 mm	Km	**32698.00**	**22550.00**
xi)	500 mm	Km	**34953.00**	**24805.00**
xii)	600 mm	Km	**45100.00**	**31570.00**
xiii)	700 mm	Km	**50738.00**	**34953.00**
xiv)	800 mm	Km	**58630.00**	**40590.00**
xv)	900 mm	Km	**64268.00**	**45100.00**
xvi)	1000 mm	Km	**71033.00**	**49610.00**
xvii)	1100 mm	Km	**98093.00**	**66523.00**
xviii)	1200 mm	Km	**104858.00**	**71033.00**
xix)	1400 mm	Km	**116133.00**	**80053.00**
xx)	1600 mm	Km	**128535.00**	**87945.00**
xxi)	1800 mm	Km	**139810.00**	**96965.00**

Section - I- (VI) - P.S.C. PIPES

Sr No	Item Description	Unit	Rate (in Rs.) 2019-20
1	**Providing ISI standard Pre - stressed Cement concrete pipes** of following class and diameter including cost of all meterial and labour required, cost, inspection charges, transportaion to stores, unloading and stacking excluding GST levied by GI & GOM in all respect etc. complete as per IS-784-2001.		
	Note: One rubber ring should be supplied with each pipe, cost included in rates below.		
	i)**Factory test pressure-**		
	a)Site test pressure + 0.1N/mm2,For working Pressure upto 1 N/mm2		
	b) Site test pressure + 0.2N/mm2,For working Pressure above 1 N/mm2		
	ii) **Site test pressure**-1.5 times working pressure pertaining to the section or 1.1 times static pressure,which ever is more (such pressure is to be control within 25% of pumphead incase of pumping main)		
	iii) **Working pressure**-The maximum sustained internal pressure excluding surge to which each portion of pipeline may be subjected when installed.		
a)	**Factory Test Pressure 2kg/Sq.cm**		
i)	350 mm	Rmt	**3131.00**
ii)	400 mm	Rmt	**3369.00**
iii)	450 mm	Rmt	**3534.00**
iv)	500 mm	Rmt	**3890.00**
v)	600 mm	Rmt	**4677.00**
vi)	700 mm	Rmt	**5207.00**
vii)	800 mm	Rmt	**6431.00**
viii)	900 mm	Rmt	**7997.00**
ix)	1000 mm	Rmt	**9323.00**
x)	1100 mm	Rmt	**10647.00**
xi)	1200 mm	Rmt	**12302.00**
xii)	1300 mm	Rmt	**14225.00**
xiii)	1400 mm	Rmt	**15652.00**
xiv)	1500 mm	Rmt	**17914.00**
xv)	1600 mm	Rmt	**19869.00**
xVi)	1700 mm	Rmt	**21825.00**
xvii)	1800 mm	Rmt	**23781.00**
b)	**Factory Test Pressure 4 kg/Sq.cm**		
i)	350 mm	Rmt	**3131.00**
ii)	400 mm	Rmt	**3370.00**
iii)	450 mm	Rmt	**3534.00**

Sr No	Item Description	Unit	Rate (in Rs.) 2019-20
iv)	500 mm	Rmt	**3890.00**
v)	600 mm	Rmt	**4678.00**
vi)	700 mm	Rmt	**5209.00**
vii)	800 mm	Rmt	**6431.00**
viii)	900 mm	Rmt	**7998.00**
ix)	1000 mm	Rmt	**9326.00**
x)	1100 mm	Rmt	**10649.00**
xi)	1200 mm	Rmt	**12303.00**
xii)	1300 mm	Rmt	**14229.00**
xiii)	1400 mm	Rmt	**15653.00**
xiv)	1500 mm	Rmt	**17918.00**
xv)	1600 mm	Rmt	**19872.00**
xVi)	1700 mm	Rmt	**21829.00**
xvii)	1800 mm	Rmt	**23784.00**
c)	**Factory Test Pressure 6 kg/Sq.cm**		
i)	350 mm	Rmt	**3137.00**
ii)	400 mm	Rmt	**3388.00**
iii)	450 mm	Rmt	**3544.00**
iv)	500 mm	Rmt	**3919.00**
v)	600 mm	Rmt	**4740.00**
vi)	700 mm	Rmt	**5390.00**
vii)	800 mm	Rmt	**6668.00**
viii)	900 mm	Rmt	**8314.00**
ix)	1000 mm	Rmt	**9697.00**
x)	1100 mm	Rmt	**11041.00**
xi)	1200 mm	Rmt	**12789.00**
xii)	1300 mm	Rmt	**14775.00**
xiii)	1400 mm	Rmt	**16256.00**
xiv)	1500 mm	Rmt	**18621.00**
xv)	1600 mm	Rmt	**20681.00**
xVi)	1700 mm	Rmt	**22741.00**
xvii)	1800 mm	Rmt	**24800.00**
d)	**Factory Test Pressure 8 kg/Sq.cm**		
i)	350 mm	Rmt	**3140.00**
ii)	400 mm	Rmt	**3413.00**
iii)	450 mm	Rmt	**3566.00**
iv)	500 mm	Rmt	**3974.00**
v)	600 mm	Rmt	**4900.00**
vi)	700 mm	Rmt	**5662.00**
vii)	800 mm	Rmt	**6951.00**
viii)	900 mm	Rmt	**8667.00**
ix)	1000 mm	Rmt	**10133.00**
x)	1100 mm	Rmt	**11595.00**
xi)	1200 mm	Rmt	**13426.00**
xii)	1300 mm	Rmt	**15529.00**
xiii)	1400 mm	Rmt	**17163.00**
xiv)	1500 mm	Rmt	**19667.00**
xv)	1600 mm	Rmt	**22190.00**

Sr No	Item Description	Unit	Rate (in Rs.) 2019-20
xVi)	1700 mm	Rmt	**24714.00**
xvii)	1800 mm	Rmt	**27241.00**
e)	**Factory Test Pressure 10 kg/Sq.cm**		
i)	350 mm	Rmt	**3157.00**
ii)	400 mm	Rmt	**3458.00**
iii)	450 mm	Rmt	**3690.00**
iv)	500 mm	Rmt	**4133.00**
v)	600 mm	Rmt	**5111.00**
vi)	700 mm	Rmt	**5889.00**
vii)	800 mm	Rmt	**7306.00**
viii)	900 mm	Rmt	**9104.00**
ix)	1000 mm	Rmt	**10663.00**
x)	1100 mm	Rmt	**12236.00**
xi)	1200 mm	Rmt	**14175.00**
xii)	1300 mm	Rmt	**16412.00**
xiii)	1400 mm	Rmt	**18551.00**
xiv)	1500 mm	Rmt	**21268.00**
xv)	1600 mm	Rmt	**23698.00**
xVi)	1700 mm	Rmt	**26131.00**
xvii)	1800 mm	Rmt	**28563.00**
f)	**Factory Test Pressure 12 kg/Sq.cm**		
i)	350 mm	Rmt	**3158.00**
ii)	400 mm	Rmt	**3468.00**
iii)	450 mm	Rmt	**3719.00**
iv)	500 mm	Rmt	**4175.00**
v)	600 mm	Rmt	**5190.00**
vi)	700 mm	Rmt	**6012.00**
vii)	800 mm	Rmt	**7476.00**
viii)	900 mm	Rmt	**9295.00**
ix)	1000 mm	Rmt	**10892.00**
x)	1100 mm	Rmt	**12485.00**
xi)	1200 mm	Rmt	**14715.00**
xii)	1300 mm	Rmt	**16945.00**
xiii)	1400 mm	Rmt	**18856.00**
xiv)	1500 mm	Rmt	**21591.00**
xv)	1600 mm	Rmt	**24060.00**
xVi)	1700 mm	Rmt	**26526.00**
xvii)	1800 mm	Rmt	**28994.00**
g)	**Factory Test Pressure 14 kg/Sq.cm**		
i)	350 mm	Rmt	**3236.00**
ii)	400 mm	Rmt	**3561.00**
iii)	450 mm	Rmt	**3833.00**
iv)	500 mm	Rmt	**4310.00**
v)	600 mm	Rmt	**5391.00**
vi)	700 mm	Rmt	**6272.00**
vii)	800 mm	Rmt	**7814.00**
viii)	900 mm	Rmt	**9739.00**

Sr No	Item Description	Unit	Rate (in Rs.) 2019-20
ix)	1000 mm	Rmt	**11617.00**
x)	1100 mm	Rmt	**13350.00**
xi)	1200 mm	Rmt	**15476.00**
xii)	1300 mm	Rmt	**17866.00**
xiii)	1400 mm	Rmt	**20360.00**
xiv)	1500 mm	Rmt	**23330.00**
xv)	1600 mm	Rmt	**26090.00**
xVi)	1700 mm	Rmt	**28851.00**
xvii)	1800 mm	Rmt	**31610.00**
h)	**Factory Test Pressure 16 kg/Sq.cm**		
i)	350 mm	Rmt	**3308.00**
ii)	400 mm	Rmt	**3656.00**
iii)	450 mm	Rmt	**3952.00**
iv)	500 mm	Rmt	**4454.00**
v)	600 mm	Rmt	**5588.00**
vi)	700 mm	Rmt	**6536.00**
vii)	800 mm	Rmt	**8152.00**
viii)	900 mm	Rmt	**10821.00**
ix)	1000 mm	Rmt	**12178.00**
x)	1100 mm	Rmt	**14615.00**
xi)	1200 mm	Rmt	**16870.00**
xii)	1300 mm	Rmt	**19418.00**
xiii)	1400 mm	Rmt	**21433.00**
xiv)	1500 mm	Rmt	**25457.00**
xv)	1600 mm	Rmt	**28555.00**
xVi)	1700 mm	Rmt	**31651.00**
xvii)	1800 mm	Rmt	**34746.00**
i)	**Factory Test Pressure 18 kg/Sq.cm**		
i)	350 mm	Rmt	**3383.00**
ii)	400 mm	Rmt	**3757.00**
iii)	450 mm	Rmt	**4065.00**
iv)	500 mm	Rmt	**4592.00**
v)	600 mm	Rmt	**5788.00**
vi)	700 mm	Rmt	**7148.00**
vii)	800 mm	Rmt	**8920.00**
viii)	900 mm	Rmt	**11281.00**
ix)	1000 mm	Rmt	**13257.00**
x)	1100 mm	Rmt	**15299.00**
xi)	1200 mm	Rmt	**17683.00**
xii)	1300 mm	Rmt	**20367.00**
xiii)	1400 mm	Rmt	**26876.00**
xiv)	1500 mm	Rmt	**30304.00**
xv)	1600 mm	Rmt	**34158.00**
xVi)	1700 mm	Rmt	**38008.00**
xvii)	1800 mm	Rmt	**41859.00**
j)	**Factory Test Pressure 20 kg/Sq.cm**		
i)	350 mm	Rmt	**3462.00**
ii)	400 mm	Rmt	**3847.00**

Sr No	Item Description	Unit	Rate (in Rs.) 2019-20
iii)	450 mm	Rmt	**4183.00**
iv)	500 mm	Rmt	**4734.00**
v)	600 mm	Rmt	**5992.00**
vi)	700 mm	Rmt	**7918.00**
vii)	800 mm	Rmt	**10535.00**
viii)	900 mm	Rmt	**12452.00**
ix)	1000 mm	Rmt	**14980.00**
x)	1100 mm	Rmt	**17808.00**
xi)	1200 mm	Rmt	**22395.00**
xii)	1300 mm	Rmt	**24641.00**
xiii)	1400 mm	Rmt	**28787.00**
xiv)	1500 mm	Rmt	**32634.00**
xv)	1600 mm	Rmt	**36498.00**
xVi)	1700 mm	Rmt	**40361.00**
xvii)	1800 mm	Rmt	**44225.00**
2	**Lowering, laying and jointing in proper grade and alignment Pre-Stressed Cement Concrete Pipes** with rubber ring joints including cost of conveyance from stores to site of works, all labour involved, etc. complete but excluding cost of rubber rings (for all class of pipes)		
i)	350 mm	Rmt	**116.00**
ii)	400 mm	Rmt	**163.00**
iii)	450 mm	Rmt	**197.00**
iv)	500 mm	Rmt	**222.00**
v)	600 mm	Rmt	**298.00**
vi)	700 mm	Rmt	**326.00**
vii)	800 mm	Rmt	**367.00**
viii)	900 mm	Rmt	**378.00**
ix)	1000 mm	Rmt	**488.00**
x)	1100 mm	Rmt	**641.00**
xi)	1200 mm	Rmt	**686.00**
xii)	1300 mm	Rmt	**815.00**
xiii)	1400 mm	Rmt	**860.00**
xiv)	1500 mm	Rmt	**1085.00**
xv)	1600 mm	Rmt	**1221.00**
xVi)	1700 mm	Rmt	**1360.00**
xvii)	1800 mm	Rmt	**1322.00**

Sr No	Item Description	Unit	Rate (in Rs.) 2019-20
3	**Hydraulic testing of Pre-Stressed Cement Concrete Pipes** with rubber ring joints to specified pressure including cost of all materials and labour and water for testing for the length upto 1 km., using reciprocating type pumps which should be able to provide specified test pressure guages and other necessary equipments, labour, operation charges, etc. requiredfor testing. The rate under this item shall also include cost of retesting, if necessary.		
i)	350 mm	Km	**12403.00**
ii)	400 mm	Km	**18040.00**
iii)	450 mm	Km	**21423.00**
iv)	500 mm	Km	**24805.00**
v)	600 mm	Km	**32698.00**
vi)	700 mm	Km	**36080.00**
vii)	800 mm	Km	**40590.00**
viii)	900 mm	Km	**41718.00**
ix)	1000 mm	Km	**54120.00**
x)	1100 mm	Km	**71033.00**
xi)	1200 mm	Km	**76670.00**
xii)	1300 mm	Km	**90200.00**
xiii)	1400 mm	Km	**95838.00**
xiv)	1500 mm	Km	**120643.00**
xv)	1600 mm	Km	**135300.00**
xvi)	1700 mm	Km	**151085.00**
xvii)	1800 mm	Km	**160105.00**

1) Only 85% rate is payable till satisfactory hydraulic testing is given.
2) Whenever manufacturer is separated and contractor for lowering, laying, jointing and testing is separate, the principal contractor shall enter into an agreement with P.S.C. pipe manufacturer for satisfactory manufacturing, transporting, lowering, laying jointing and testing of pipes.
3) This foot note shall appear into the tender conditions.

Section - I- (VII) - B.W.S.C. PIPES			
Sr No	**Item Description**	**Unit**	**Rate (in Rs.) 2019-2020**
1	**Providing and supplying European Standard EN 639/1994 and EN 641/1994 or AWWA C-303 standard and reinforced concrete pressure pipes cylinder type** or IS-15155-2002 (Bar wrapped steel cylinder pipes suitable for overlaping steel welded joint or butt welded steel joints) of following class and diameter including cost of all material and labour required, inspection charges, transportation to stores, transit insurance, loading, unloding and stacking excluding GST levied by GOI & GOM in all respect,etc. complete.		
	Note: 1) Class mentioned below represents the working pressure of pipe.		
	2) For external coating at site to the joints, necessary polythene wrapping for pouring cement slurry shall also be given free with each pipe.		
	i)**Factory test pressure-**		
	a)Site test pressure + 0.1N/mm2,For working Pressure upto 1 N/mm2		
	b) Site test pressure + 0.2N/mm2,For working Pressure above 1 N/mm2		
	ii) **Site test pressure**-1.5 times working pressure pertaining to the section or 1.1 times static pressure,which ever is more (such pressure is to be control within 25% of pumphead incase of pumping main)		
	iii) **Working pressure**-The maximum sustained internal pressure excluding surge to which each portion of pipeline may be subjected when installed		
a)	**Facory Test Pressure 4 kg/Sqcm**		
i)	300 mm	Rmt	**3154.00**
ii)	350 mm	Rmt	**3548.00**
iii)	400 mm	Rmt	**3892.00**
iv)	450 mm	Rmt	**4309.00**
v)	500 mm	Rmt	**4793.00**
vi)	600 mm	Rmt	**6232.00**
vii)	700 mm	Rmt	**7202.00**
viii)	800 mm	Rmt	**7822.00**
ix)	900 mm	Rmt	**10930.00**
x)	1000mm	Rmt	**12596.00**
xi)	1100mm	Rmt	**18103.00**
xii)	1200mm	Rmt	**20189.00**
xiii)	1300mm	Rmt	**23577.00**
xiv)	1400mm	Rmt	**25288.00**

Sr No	Item Description	Unit	Rate (in Rs.) 2019-2020
xv)	1500mm	Rmt	**26988.00**
xvi)	1600mm	Rmt	**29074.00**
xvii)	1700mm	Rmt	**30845.00**
xviii)	1800mm	Rmt	**32934.00**
b)	**Factory Test Pressure 6 kg/Sqcm**		
i)	300 mm	Rmt	**3158.00**
ii)	350 mm	Rmt	**3551.00**
iii)	400 mm	Rmt	**3896.00**
iv)	450 mm	Rmt	**4311.00**
v)	500 mm	Rmt	**4802.00**
vi)	600 mm	Rmt	**6241.00**
vii)	700 mm	Rmt	**7209.00**
viii)	800 mm	Rmt	**7828.00**
ix)	900 mm	Rmt	**10936.00**
x)	1000mm	Rmt	**12602.00**
xi)	1100mm	Rmt	**18112.00**
xii)	1200mm	Rmt	**20197.00**
xiii)	1300mm	Rmt	**23582.00**
xiv)	1400mm	Rmt	**25296.00**
xv)	1500mm	Rmt	**26995.00**
xvi)	1600mm	Rmt	**29083.00**
xvii)	1700mm	Rmt	**30851.00**
xviii)	1800mm	Rmt	**32939.00**
c)	**FactoryTest Pressure 8 kg/Sqcm**		
i)	300 mm	Rmt	**3161.00**
ii)	350 mm	Rmt	**3557.00**
iii)	400 mm	Rmt	**3899.00**
iv)	450 mm	Rmt	**4314.00**
v)	500 mm	Rmt	**4812.00**
vi)	600 mm	Rmt	**6250.00**
vii)	700 mm	Rmt	**7218.00**
viii)	800 mm	Rmt	**7838.00**
ix)	900 mm	Rmt	**10947.00**
x)	1000mm	Rmt	**12613.00**
xi)	1100mm	Rmt	**18122.00**
xii)	1200mm	Rmt	**20206.00**
xiii)	1300mm	Rmt	**23592.00**
xiv)	1400mm	Rmt	**25304.00**
xv)	1500mm	Rmt	**27005.00**
xvi)	1600mm	Rmt	**29093.00**
xvii)	1700mm	Rmt	**30861.00**
xviii)	1800mm	Rmt	**32951.00**
d)	**Factory Test Pressure 10 kg/Sqcm**		
i)	300 mm	Rmt	**3162.00**
ii)	350 mm	Rmt	**3558.00**
iii)	400 mm	Rmt	**3903.00**

Sr No	Item Description	Unit	Rate (in Rs.) 2019-2020
iv)	450 mm	Rmt	**4316.00**
v)	500 mm	Rmt	**4826.00**
vi)	600 mm	Rmt	**6266.00**
vii)	700 mm	Rmt	**7234.00**
viii)	800 mm	Rmt	**7854.00**
ix)	900 mm	Rmt	**10962.00**
x)	1000mm	Rmt	**12627.00**
xi)	1100mm	Rmt	**18135.00**
xii)	1200mm	Rmt	**20222.00**
xiii)	1300mm	Rmt	**23608.00**
xiv)	1400mm	Rmt	**25318.00**
xv)	1500mm	Rmt	**27020.00**
xvi)	1600mm	Rmt	**29106.00**
xvii)	1700mm	Rmt	**30877.00**
xviii)	1800mm	Rmt	**32966.00**
e)	**Factory Test Pressure 12 kg/Sqcm**		
i)	300 mm	Rmt	**3106.00**
ii)	350 mm	Rmt	**3495.00**
iii)	400 mm	Rmt	**3833.00**
iv)	450 mm	Rmt	**4241.00**
v)	500 mm	Rmt	**4757.00**
vi)	600 mm	Rmt	**6167.00**
vii)	700 mm	Rmt	**7117.00**
viii)	800 mm	Rmt	**8801.00**
ix)	900 mm	Rmt	**10757.00**
x)	1000mm	Rmt	**13373.00**
xi)	1100mm	Rmt	**17816.00**
xii)	1200mm	Rmt	**19863.00**
xiii)	1300mm	Rmt	**23186.00**
xiv)	1400mm	Rmt	**24867.00**
xv)	1500mm	Rmt	**26818.00**
xvi)	1600mm	Rmt	**29666.00**
xvii)	1700mm	Rmt	**32109.00**
xviii)	1800mm	Rmt	**35709.00**
f)	**Factory Test Pressure 14 kg/Sqcm**		
i)	300 mm	Rmt	**3111.00**
ii)	350 mm	Rmt	**3501.00**
iii)	400 mm	Rmt	**3836.00**
iv)	450 mm	Rmt	**4253.00**
v)	500 mm	Rmt	**4841.00**
vi)	600 mm	Rmt	**6279.00**
vii)	700 mm	Rmt	**8171.00**
viii)	800 mm	Rmt	**9579.00**
ix)	900 mm	Rmt	**11816.00**
x)	1000mm	Rmt	**14226.00**
xi)	1100mm	Rmt	**17890.00**
xii)	1200mm	Rmt	**19856.00**

Sr No	Item Description	Unit	Rate (in Rs.) 2019-2020
xiii)	1300mm	Rmt	**23759.00**
xiv)	1400mm	Rmt	**26849.00**
xv)	1500mm	Rmt	**29873.00**
xvi)	1600mm	Rmt	**33311.00**
xvii)	1700mm	Rmt	**36575.00**
xviii)	1800mm	Rmt	**40014.00**
g)	**Factory Test Pressure 16 kg/Sqcm**		
i)	300 mm	Rmt	**3113.00**
ii)	350 mm	Rmt	**3504.00**
iii)	400 mm	Rmt	**3841.00**
iv)	450 mm	Rmt	**4403.00**
v)	500 mm	Rmt	**5192.00**
vi)	600 mm	Rmt	**6740.00**
vii)	700 mm	Rmt	**8697.00**
viii)	800 mm	Rmt	**10422.00**
ix)	900 mm	Rmt	**12889.00**
x)	1000mm	Rmt	**15666.00**
xi)	1100mm	Rmt	**18870.00**
xii)	1200mm	Rmt	**22004.00**
xiii)	1300mm	Rmt	**26213.00**
xiv)	1400mm	Rmt	**29590.00**
xv)	1500mm	Rmt	**32999.00**
xvi)	1600mm	Rmt	**36698.00**
xvii)	1700mm	Rmt	**40733.00**
xviii)	1800mm	Rmt	**45451.00**
h)	**Factory Test Pressure 18 kg/Sqcm**		
i)	300 mm	Rmt	**3267.00**
ii)	350 mm	Rmt	**3676.00**
iii)	400 mm	Rmt	**4083.00**
iv)	450 mm	Rmt	**4758.00**
v)	500 mm	Rmt	**5601.00**
vi)	600 mm	Rmt	**7329.00**
vii)	700 mm	Rmt	**9635.00**
viii)	800 mm	Rmt	**11371.00**
ix)	900 mm	Rmt	**14054.00**
x)	1000mm	Rmt	**17145.00**
xi)	1100mm	Rmt	**20629.00**
xii)	1200mm	Rmt	**24037.00**
xiii)	1300mm	Rmt	**28542.00**
xiv)	1400mm	Rmt	**32616.00**
xv)	1500mm	Rmt	**36024.00**
xvi)	1600mm	Rmt	**40865.00**
xvii)	1700mm	Rmt	**45322.00**
xviii)	1800mm	Rmt	**50163.00**
i)	**Factory Test Pressure 20 kg/Sqcm**		
i)	300 mm	Rmt	**3333.00**

Sr No	Item Description	Unit	Rate (in Rs.) 2019-2020
ii)	350 mm	Rmt	**3662.00**
iii)	400 mm	Rmt	**4312.00**
iv)	450 mm	Rmt	**4925.00**
v)	500 mm	Rmt	**5972.00**
vi)	600 mm	Rmt	**7812.00**
vii)	700 mm	Rmt	**10157.00**
viii)	800 mm	Rmt	**12398.00**
ix)	900 mm	Rmt	**15310.00**
x)	1000mm	Rmt	**18731.00**
xi)	1100mm	Rmt	**22481.00**
xii)	1200mm	Rmt	**26136.00**
xiii)	1300mm	Rmt	**31046.00**
xiv)	1400mm	Rmt	**35780.00**
xv)	1500mm	Rmt	**40296.00**
xvi)	1600mm	Rmt	**45008.00**
xvii)	1700mm	Rmt	**50280.00**
xviii)	1800mm	Rmt	**55658.00**

Notes : 1) For lowering, laying & pouring of cement mortar in the field on joints (after laying and welding), rates as per P. S. C. pipes lowering, laying and jointing shall be adopted.

2) For field welding rates applicable for similar welding in M. S. pipes given in that section shall be abopted.

3) Whenever manufacturer is separate and contractor for lowering laying, jointing and testing is separate, the pricipal contractor shall be enter into an agreement with B. W. S. C. pipe manufacturer for satisfactory manufacturing transporting, lowering, laying, jointing and testing of pipes.

4) No negative tolerance shall be accepted for the M. S. Shell thickness of B. W. S. C. pipes over the thickness mentioned in E. N. 641 of AWWA AC 303.

Section - I- (VIII) - GRP PIPES

Sr No	Item Description	Unit	Rate (in Rs.) 2019-2020
1	**Providing and supplying Glass fibre reinforced polyester pipes** confirming to BIS - 12709 / BIS 14402 with double bell REKA GRP coupling EPDM rubber gaskets for sealing of following pressure diameter and stiffness class including cost of all material and labour required, insurance, transportation to store, unloading and stacking excluding GST levied by GOI & GOM in all respect etc. complete.		
A	**Class(SN) 2500**		
a)	**3 Kg/Sq.cm.**		
i)	300 mm	Rmt	**1515.00**
ii)	350 mm	Rmt	**1752.00**
iii)	400 mm	Rmt	**1929.00**
iv)	450 mm	Rmt	**2170.00**
v)	500 mm	Rmt	**2455.00**
vi)	600 mm	Rmt	**3155.00**
vii)	700 mm	Rmt	**3922.00**
viii)	800 mm	Rmt	**4815.00**
ix)	900 mm	Rmt	**5883.00**
x)	1000mm	Rmt	**6978.00**
xi)	1100mm	Rmt	**8483.00**
xii)	1200mm	Rmt	**9876.00**
xiii)	1300mm	Rmt	**11183.00**
xiv)	1400mm	Rmt	**12913.00**
xv)	1500mm	Rmt	**14676.00**
xvi)	1600mm	Rmt	**17092.00**
xvii)	1700mm	Rmt	**20427.00**
xviii)	1800mm	Rmt	**22290.00**
xviv)	1900mm	Rmt	**24917.00**
xx	2000mm	Rmt	**26939.00**
xxi)	2100mm	Rmt	**30104.00**
xxii)	2200mm	Rmt	**32314.00**
xxiii)	2300mm	Rmt	**34922.00**
xxiv)	2400mm	Rmt	**37330.00**
b)	**6 kg/Sq.cm.**		
i)	300 mm	Rmt	**1573.00**
ii)	350 mm	Rmt	**1797.00**
iii)	400 mm	Rmt	**2020.00**
iv)	450 mm	Rmt	**2242.00**
v)	500 mm	Rmt	**2549.00**
vi)	600 mm	Rmt	**3302.00**
vii)	700 mm	Rmt	**4105.00**
viii)	800 mm	Rmt	**5030.00**
ix)	900 mm	Rmt	**6128.00**
x)	1000mm	Rmt	**7289.00**
xi)	1100mm	Rmt	**8833.00**

Sr No	Item Description	Unit	Rate (in Rs.) 2019-2020
xii)	1200mm	Rmt	**10221.00**
xiii)	1300mm	Rmt	**11695.00**
xiv)	1400mm	Rmt	**13383.00**
xv)	1500mm	Rmt	**15266.00**
xvi)	1600mm	Rmt	**17805.00**
xvii)	1700mm	Rmt	**21287.00**
xviii)	1800mm	Rmt	**23163.00**
xviv)	1900mm	Rmt	**25919.00**
xx	2000mm	Rmt	**27991.00**
xxi)	2100mm	Rmt	**31293.00**
xxii)	2200mm	Rmt	**33723.00**
xxiii)	2300mm	Rmt	**36345.00**
xxiv)	2400mm	Rmt	**38811.00**
c)	**9 kg/Sq.cm.**		
i)	300 mm	Rmt	**1623.00**
ii)	350 mm	Rmt	**1885.00**
iii)	400 mm	Rmt	**2102.00**
iv)	450 mm	Rmt	**2383.00**
v)	500 mm	Rmt	**2702.00**
vi)	600 mm	Rmt	**3504.00**
vii)	700 mm	Rmt	**4364.00**
viii)	800 mm	Rmt	**5435.00**
ix)	900 mm	Rmt	**6640.00**
x)	1000mm	Rmt	**7862.00**
xi)	1100mm	Rmt	**9501.00**
xii)	1200mm	Rmt	**11032.00**
xiii)	1300mm	Rmt	**12739.00**
xiv)	1400mm	Rmt	**14638.00**
xv)	1500mm	Rmt	**16624.00**
xvi)	1600mm	Rmt	**19408.00**
xvii)	1700mm	Rmt	**23254.00**
xviii)	1800mm	Rmt	**25431.00**
xviv)	1900mm	Rmt	**28251.00**
xx	2000mm	Rmt	**30655.00**
xxi)	2100mm	Rmt	**34114.00**
xxii)	2200mm	Rmt	**36675.00**
xxiii)	2300mm	Rmt	**39600.00**
xxiv)	2400mm	Rmt	**42706.00**
d)	**12 kg/Sq.cm.**		
i)	300 mm	Rmt	**1719.00**
ii)	350 mm	Rmt	**1984.00**
iii)	400 mm	Rmt	**2210.00**
iv)	450 mm	Rmt	**2886.00**
v)	500 mm	Rmt	**2501.00**
vi)	600 mm	Rmt	**3763.00**
vii)	700 mm	Rmt	**4668.00**
viii)	800 mm	Rmt	**5784.00**

Sr No	Item Description	Unit	Rate (in Rs.) 2019-2020
ix)	900 mm	Rmt	**7092.00**
x)	1000mm	Rmt	**8454.00**
xi)	1100mm	Rmt	**10362.00**
xii)	1200mm	Rmt	**12086.00**
xiii)	1300mm	Rmt	**13677.00**
xiv)	1400mm	Rmt	**15742.00**
xv)	1500mm	Rmt	**17999.00**
xvi)	1600mm	Rmt	**20877.00**
xvii)	1700mm	Rmt	**25062.00**
xviii)	1800mm	Rmt	**27477.00**
xviv)	1900mm	Rmt	**30415.00**
xx	2000mm	Rmt	**33075.00**
xxi)	2100mm	Rmt	**36873.00**
xxii)	2200mm	Rmt	**39790.00**
e)	**15 kg/Sq.cm.**		
i)	300 mm	Rmt	**1790.00**
ii)	350 mm	Rmt	**2067.00**
iii)	400 mm	Rmt	**2300.00**
iv)	450 mm	Rmt	**2650.00**
v)	500 mm	Rmt	**3046.00**
vi)	600 mm	Rmt	**4025.00**
vii)	700 mm	Rmt	**5019.00**
viii)	800 mm	Rmt	**6263.00**
ix)	900 mm	Rmt	**7721.00**
x)	1000mm	Rmt	**9163.00**
xi)	1100mm	Rmt	**11242.00**
xii)	1200mm	Rmt	**13044.00**
xiii)	1300mm	Rmt	**14972.00**
xiv)	1400mm	Rmt	**17233.00**
xv)	1500mm	Rmt	**19550.00**
xvi)	1600mm	Rmt	**22684.00**
xvii)	1700mm	Rmt	**27612.00**
xviii)	1800mm	Rmt	**30176.00**
xviv)	1900mm	Rmt	**33695.00**
xx	2000mm	Rmt	**36671.00**
B	**Class (SN) 5000**		
a)	**3 Kg/Sq.cm.**		
i)	300 mm	Rmt	**1624.00**
ii)	350 mm	Rmt	**1905.00**
iii)	400 mm	Rmt	**2170.00**
iv)	450 mm	Rmt	**2470.00**
v)	500 mm	Rmt	**2732.00**
vi)	600 mm	Rmt	**3561.00**
vii)	700 mm	Rmt	**4457.00**
viii)	800 mm	Rmt	**5523.00**
ix)	900 mm	Rmt	**6802.00**
x)	1000mm	Rmt	**8089.00**

Sr No	Item Description	Unit	Rate (in Rs.) 2019-2020
xi)	1100mm	Rmt	**9807.00**
xii)	1200mm	Rmt	**11494.00**
xiii)	1300mm	Rmt	**13088.00**
xiv)	1400mm	Rmt	**15041.00**
xv)	1500mm	Rmt	**17166.00**
xvi)	1600mm	Rmt	**19954.00**
xvii)	1700mm	Rmt	**23911.00**
xviii)	1800mm	Rmt	**26225.00**
xix)	1900mm	Rmt	**29189.00**
xx)	2000mm	Rmt	**31747.00**
xxi)	2100mm	Rmt	**35346.00**
xxii)	2200mm	Rmt	**38152.00**
b)	**6 Kg/Sq.cm.**		
i)	300 mm	Rmt	**1649.00**
ii)	350 mm	Rmt	**1938.00**
iii)	400 mm	Rmt	**2141.00**
iv)	450 mm	Rmt	**2441.00**
v)	500 mm	Rmt	**2812.00**
vi)	600 mm	Rmt	**3638.00**
vii)	700 mm	Rmt	**4571.00**
viii)	800 mm	Rmt	**5656.00**
ix)	900 mm	Rmt	**6967.00**
x)	1000mm	Rmt	**8271.00**
xi)	1100mm	Rmt	**10117.00**
xii)	1200mm	Rmt	**11759.00**
xiii)	1300mm	Rmt	**13438.00**
xiv)	1400mm	Rmt	**15419.00**
xv)	1500mm	Rmt	**17566.00**
xvi)	1600mm	Rmt	**20446.00**
xvii)	1700mm	Rmt	**24495.00**
xviii)	1800mm	Rmt	**26858.00**
xix)	1900mm	Rmt	**29918.00**
xx)	2000mm	Rmt	**32596.00**
xxi)	2100mm	Rmt	**36260.00**
xxii)	2200mm	Rmt	**39200.00**
c)	**9 Kg/Sq.cm.**		
i)	300 mm	Rmt	**1709.00**
ii)	350 mm	Rmt	**2003.00**
iii)	400 mm	Rmt	**2254.00**
iv)	450 mm	Rmt	**2566.00**
v)	500 mm	Rmt	**2936.00**
vi)	600 mm	Rmt	**4034.00**
vii)	700 mm	Rmt	**4791.00**
viii)	800 mm	Rmt	**6170.00**
ix)	900 mm	Rmt	**7283.00**
x)	1000mm	Rmt	**8689.00**
xi)	1100mm	Rmt	**14027.00**

Sr No	Item Description	Unit	Rate (in Rs.) 2019-2020
xii)	1200mm	Rmt	**15959.00**
xiii)	1300mm	Rmt	**17981.00**
xiv)	1400mm	Rmt	**20128.00**
xv)	1500mm	Rmt	**23057.00**
xvi)	1600mm	Rmt	**26194.00**
xvii)	1700mm	Rmt	**31536.00**
xviii)	1800mm	Rmt	**34364.00**
d)	**12 Kg/Sq.cm.**		
i)	300 mm	Rmt	**1758.00**
ii)	350 mm	Rmt	**2085.00**
iii)	400 mm	Rmt	**2305.00**
iv)	450 mm	Rmt	**2669.00**
v)	500 mm	Rmt	**3048.00**
vi)	600 mm	Rmt	**4025.00**
vii)	700 mm	Rmt	**5073.00**
viii)	800 mm	Rmt	**6261.00**
ix)	900 mm	Rmt	**7819.00**
x)	1000mm	Rmt	**9196.00**
xi)	1100mm	Rmt	**11303.00**
xii)	1200mm	Rmt	**13135.00**
xiii)	1300mm	Rmt	**15054.00**
xiv)	1400mm	Rmt	**17347.00**
xv)	1500mm	Rmt	**19703.00**
xvi)	1600mm	Rmt	**22773.00**
xvii)	1700mm	Rmt	**27413.00**
xviii)	1800mm	Rmt	**30136.00**
xix)	1900mm	Rmt	**33396.00**
e)	**15 Kg/Sq.cm.**		
i)	300 mm	Rmt	**1821.00**
ii)	350 mm	Rmt	**2167.00**
iii)	400 mm	Rmt	**2423.00**
iv)	450 mm	Rmt	**2798.00**
v)	500 mm	Rmt	**3193.00**
vi)	600 mm	Rmt	**4238.00**
vii)	700 mm	Rmt	**5335.00**
viii)	800 mm	Rmt	**6675.00**
ix)	900 mm	Rmt	**8232.00**
x)	1000mm	Rmt	**9814.00**
xi)	1100mm	Rmt	**11937.00**
xii)	1200mm	Rmt	**13987.00**
xiii)	1300mm	Rmt	**15983.00**
xiv)	1400mm	Rmt	**18442.00**
xv)	1500mm	Rmt	**20975.00**
xvi)	1600mm	Rmt	**24285.00**
xvii)	1700mm	Rmt	**29161.00**
xviii)	1800mm	Rmt	**32117.00**

Notes:

Sr No	Item Description	Unit	Rate (in Rs.) 2019-2020

1) For lowering, laying & jointing rates of GRP pipes 50 % rates for lowering, laying & jointing of PSC pipes of corresponding diameter shall be adopted.

2) Where manufacturer is seperate & contractor for lowering,laying jointing &testing is seperate the principal controctor shall enter into an aggrement with G.R.P. pipe manufacture for safisfactory manufacturing, transporiting, lowering, laying, jointing & testing of pipe.

3) Only 85 % Payment shall be payable till satisfactory hydraulic testing is given.

Above Notes shall appear in tender conditions.

Section - I- (X) - H.D.P.E. PIPES

Sr No	Item Description	Unit	Rate (in Rs.) 2019-2020
1	**Providing and supplying in standard lengths Polyethelene Pipes,** confirming to IS 4984 /14151 / 12786 / 13488 with nesessary jointing material like mechanical connector i. e. thread / insert joint / quick release coupler joint /compression fitting joint or flanged joint excluding coupler/ specials, including transportation and freight charges, inspection charges, loading / unloading charges, conveyance to the departmental stores & stacking the same in closed shade duly protecting from sunrays & rains, excluding GST levied by GI & GOM in all respect etc. complete.**As per IS:4984-2016**		
A)	**PE-100**		
a)	**6kg/sq,cm**		
i)	63mm	Rmt	**87.00**
ii)	75mm	Rmt	**122.00**
iii)	90mm	Rmt	**173.00**
iv)	110mm	Rmt	**251.00**
v)	125mm	Rmt	**344.00**
vi)	140mm	Rmt	**432.00**
vii)	160mm	Rmt	**559.00**
viii)	180mm	Rmt	**704.00**
ix)	200mm	Rmt	**825.00**
x)	225mm	Rmt	**1063.00**
xi)	250mm	Rmt	**1307.00**
xii)	280mm	Rmt	**1637.00**
xiii)	315mm	Rmt	**2074.00**
xiv)	355mm	Rmt	**2628.00**
xv)	400mm	Rmt	**3443.00**
xvi)	450 mm	Rmt	**4536.00**
xvii)	500 mm	Rmt	**5609.00**
xviii)	560 mm	Rmt	**7021.00**
xix)	630 mm	Rmt	**8836.00**
xx)	710 mm	Rmt	**11409.00**
xix)	800 mm	Rmt	**13754.00**
xx)	900 mm	Rmt	**17425.00**
xix)	1000 mm	Rmt	**21487.00**
b)	**8kg/sq,cm**		
i)	63mm	Rmt	**110.00**
ii)	75mm	Rmt	**147.00**
iii)	90mm	Rmt	**210.00**

Sr No	Item Description	Unit	Rate (in Rs.) 2019-2020
iv)	110mm	Rmt	**307.00**
v)	125mm	Rmt	**398.00**
vi)	140mm	Rmt	**545.00**
vii)	160mm	Rmt	**706.00**
viii)	180mm	Rmt	**891.00**
ix)	200mm	Rmt	**1048.00**
x)	225mm	Rmt	**1346.00**
xi)	250mm	Rmt	**1659.00**
xii)	280mm	Rmt	**2080.00**
xiii)	315mm	Rmt	**2635.00**
xiv)	355mm	Rmt	**3334.00**
xv)	400mm	Rmt	**4377.00**
xvi)	450 mm	Rmt	**5852.00**
xvii)	500 mm	Rmt	**7218.00**
xviii)	560 mm	Rmt	**9062.00**
xix)	630 mm	Rmt	**11402.00**
xx)	710 mm	Rmt	**14722.00**
xix)	800 mm	Rmt	**17760.00**
xx)	900 mm	Rmt	**21942.00**
xix)	1000 mm	Rmt	**22481.00**
c)	**10kg/sq,cm**		
i)	63mm	Rmt	**135.00**
ii)	75mm	Rmt	**191.00**
iii)	90mm	Rmt	**275.00**
iv)	110mm	Rmt	**405.00**
v)	125mm	Rmt	**520.00**
vi)	140mm	Rmt	**650.00**
vii)	160mm	Rmt	**845.00**
viii)	180mm	Rmt	**1070.00**
ix)	200mm	Rmt	**1255.00**
x)	225mm	Rmt	**1607.00**
xi)	250mm	Rmt	**2005.00**
xii)	280mm	Rmt	**2477.00**
xiii)	315mm	Rmt	**3180.00**
xiv)	355mm	Rmt	**3991.00**
xv)	400mm	Rmt	**5316.00**
xvi)	450 mm	Rmt	**7073.00**
xvii)	500 mm	Rmt	**8743.00**
xviii)	560 mm	Rmt	**10515.00**
xix)	630 mm	Rmt	**13802.00**

Sr No	Item Description	Unit	Rate (in Rs.) 2019-2020
xx)	710 mm	Rmt	**17532.00**
xix)	800 mm	Rmt	**21131.00**
xx)	900 mm	Rmt	**21383.00**
xix)	1000 mm	Rmt	**24024.00**
d)	**12.5kg/sq,cm**		
i)	63mm	Rmt	**161.00**
ii)	75mm	Rmt	**226.00**
iii)	90mm	Rmt	**325.00**
iv)	110mm	Rmt	**479.00**
v)	125mm	Rmt	**618.00**
vi)	140mm	Rmt	**776.00**
vii)	160mm	Rmt	**1009.00**
viii)	180mm	Rmt	**1275.00**
ix)	200mm	Rmt	**1499.00**
x)	225mm	Rmt	**1934.00**
ix)	250mm	Rmt	**2378.00**
x)	280mm	Rmt	**2983.00**
ix)	315mm	Rmt	**3776.00**
x)	355mm	Rmt	**4795.00**
ix)	400mm	Rmt	**6302.00**
x)	450 mm	Rmt	**8422.00**
ix)	500 mm	Rmt	**10380.00**
x)	560 mm	Rmt	**12634.00**
ix)	630 mm	Rmt	**16595.00**
x)	710 mm	Rmt	**17114.00**
ix)	800 mm	Rmt	**18747.00**
x)	900 mm	Rmt	**23751.00**
ix)	1000 mm	Rmt	**28927.00**
e)	**16 kg/cm2**		
i)	63mm	Rmt	**183.00**
ii)	75mm	Rmt	**260.00**
iii)	90mm	Rmt	**372.00**
iv)	110mm	Rmt	**549.00**
v)	125mm	Rmt	**711.00**
vi)	140mm	Rmt	**886.00**
vii)	160mm	Rmt	**1163.00**
viii)	180mm	Rmt	**1463.00**
ix)	200mm	Rmt	**2297.00**
x)	225mm	Rmt	**2903.00**

Sr No	Item Description	Unit	Rate (in Rs.) 2019-2020
xi)	250mm	Rmt	**3581.00**
xii)	280mm	Rmt	**4491.00**
xiii)	315mm	Rmt	**5677.00**
xiv)	355mm	Rmt	**7200.00**
xvii)	400mm	Rmt	**9329.00**
xvi)	450 mm	Rmt	**11824.00**
xvii)	500 mm	Rmt	**14581.00**
xviii)	560 mm	Rmt	**16041.00**
xix)	630 mm	Rmt	**16842.00**
xx)	710 mm	Rmt	**17980.00**
xix)	800 mm	Rmt	**21663.00**
xx)	900 mm	Rmt	**27418.00**
xix)	1000 mm	Rmt	**33664.00**
2	**Lowering, Laying and Jointing H. D. P. E./M. D. P. E. pipes** in proper position including all specials by compression fitting/electrofusion and butt fusion jointing procedure as per relevent IS Code complet with all materials for jointing procedure like Electrofusion machine, Electric heater/butt fusion welding machine with hydraulic jack, top loading clamp etc. and all labours as directed by engineer in charge as per IS-7634 Part II		
	For all classes.		
i)	20mm	Rmt	**11.00**
ii)	25mm	Rmt	**17.00**
iii)	32mm	Rmt	**21.00**
iv)	40mm	Rmt	**28.00**
v)	50mm	Rmt	**34.00**
vi)	63mm	Rmt	**41.00**
vii)	75mm	Rmt	**44.00**
viii)	90mm	Rmt	**61.00**
ix)	110mm	Rmt	**64.00**
x)	125mm	Rmt	**73.00**
xi)	140mm	Rmt	**97.00**
xii)	160mm	Rmt	**105.00**
xiii)	180mm	Rmt	**105.00**
xiv)	200mm	Rmt	**117.00**
xvii)	225mm	Rmt	**150.00**
xvi)	250mm	Rmt	**154.00**
xvii)	280mm	Rmt	**191.00**
xviii)	315mm	Rmt	**210.00**
xix)	355mm	Rmt	**229.00**
xx)	400mm	Rmt	**232.00**
xix)	450 mm	Rmt	**262.00**
xx)	500 mm	Rmt	**337.00**
xxi)	560 mm	Rmt	**378.00**

Sr No	Item Description	Unit	Rate (in Rs.) 2019-2020
xxii)	630 mm	Rmt	**425.00**
3	**Hydraulic testing of H. D. P. E./ M. D. P. E. pipe line** to specified pressure including cost of all materials and labour and water for testing for specified length including cutting, placing end cap making arrangement for filling safe water using reciprocating type pumps which should be able to provide specified test pressure gauges and other necessary equipments,labour, operation charges, etc. required for testing. The rate under this item shall also include cost of retesting, if necessary and reinstating to original position..		
i)	20mm	Km	**1128.00**
ii)	25mm	Km	**2255.00**
iii)	32mm	Km	**2255.00**
iv)	40mm	Km	**3383.00**
v)	50mm	Km	**3383.00**
vi)	63mm	Km	**4510.00**
vii)	75mm	Km	**4510.00**
viii)	90mm	Km	**6765.00**
ix)	110mm	Km	**6765.00**
x)	125mm	Km	**7893.00**
xi)	140mm	Km	**11275.00**
xii)	160mm	Km	**11275.00**
xiii)	180mm	Km	**11275.00**
xiv)	200mm	Km	**12403.00**
xv)	225mm	Km	**16913.00**
xvi)	250mm	Km	**16913.00**
xvii)	280mm	Km	**21423.00**
xvi)	315mm	Km	**23678.00**
xvii)	355mm	Km	**25933.00**
xvi)	400mm	Km	**25933.00**
xvii)	450mm	Km	**29315.00**
xvi)	500mm	Km	**37208.00**
xvii)	560mm	Km	**41718.00**
xvi)	630mm	Km	**47355.00**

Sr No	Item Description	Unit	Rate (in Rs.) 2019-2020
4	**Providing supplying in standard length (PE material) HDPE Double wall corrugated pipe** for non pressure underground drainage and sewerage with smooth internal & corrugated external surface confirming to IS 16098:Part-2 2013 with spigot or plain end with necessary jointing material coupler including transportation and freight charges, inspection charges, loading and unloading charges, conveyance to departmental store and stacking the same in closed shade duly protecting from direct sun ray and rains excluding GST levied by GoI and GoM in all respect, etc. complete.		
	Rate for Class SN 4		
i)	ID 135 mm dia	Rmt	**249.00**
ii)	ID 150 mm dia	Rmt	**318.00**
iii)	ID 170 mm dia	Rmt	**370.00**
iv)	ID 200 mm dia	Rmt	**506.00**
v)	ID 250 mm dia	Rmt	**835.00**
vi)	ID 300 mm dia	Rmt	**1289.00**
vii)	ID 400 mm dia	Rmt	**1740.00**
viii)	ID 500 mm dia	Rmt	**2874.00**
ix)	ID 600 mm dia	Rmt	**4374.00**
x)	ID 800 mm dia	Rmt	**7093.00**
	Rate for Class SN 8		
i)	ID 135 mm dia	Rmt	**298.00**
ii)	ID 150 mm dia	Rmt	**381.00**
iii)	ID 170 mm dia	Rmt	**443.00**
iv)	ID 200 mm dia	Rmt	**608.00**
v)	ID 250 mm dia	Rmt	**1002.00**
vi)	ID 300 mm dia	Rmt	**1548.00**
vii)	ID 400 mm dia	Rmt	**2088.00**
viii)	ID 500 mm dia	Rmt	**3449.00**
ix)	ID 600 mm dia	Rmt	**5249.00**
x)	ID 800 mm dia	Rmt	**8510.00**

Sr No	Item Description	Unit	Rate (in Rs.) 2019-2020
5	**Lowering, Laying and Jointing (PE material) HDPE double wall corrugated pipe** for non pressure underground by heating to the ends of pipes with the help of tefflon coated electric heater to the required temparature and then pressing the ends together against each other, to form a monolithic & leak proof joint by thermosetting process. The pressing may be required to be done with Jacks/ Hydraulic Jacks/Butt fusion machine etc. complete with all materials labours as directed by Engineer - in -charge. including		
	Rate for SN 4 and SN 8		
i)	ID 135 mm dia	Rmt	**34.00**
ii)	ID 150 mm dia	Rmt	**36.00**
iii)	ID 170 mm dia	Rmt	**40.00**
iv)	ID 200 mm dia	Rmt	**43.00**
v)	ID 250 mm dia	Rmt	**53.00**
vi)	ID 300 mm dia	Rmt	**65.00**
vii)	ID 400 mm dia	Rmt	**79.00**
viii)	ID 500 mm dia	Rmt	**94.00**
ix)	ID 600 mm dia	Rmt	**108.00**
x)	ID 800 mm dia	Rmt	**125.00**
6	**Hydraulic testing of HDPE double wall corrugated pipe for non pressure underground line** to specified pressure including cost of all materials and labour and water for testing for specified length including cutting, placing end cap making arrangement for filling safe water using reciprocating type pumps which should be able to provide specified test pressure gauges and other necessary equipments, labour, operation charges, etc. required for testing. The rate under this item shall also include cost of retesting, if necessary and reinstating to original position		
	Rate for SN 4 and SN 8		
i)	ID 135 mm dia	Km	**3383.00**
ii)	ID 150 mm dia	Km	**3383.00**
iii)	ID 170 mm dia	Km	**4510.00**
iv)	ID 200 mm dia	Km	**4510.00**
v)	ID 250 mm dia	Km	**5638.00**
vi)	ID 300 mm dia	Km	**6765.00**
vii)	ID 400 mm dia	Km	**7893.00**
viii)	ID 500 mm dia	Km	**9020.00**
ix)	ID 600 mm dia	Km	**11275.00**
x)	ID 800 mm dia	Km	**12403.00**

Only 85% rates of providing item shall be payable till satisfactory hydraulic testing is given.

Section - I- (X) - M.D.P.E. PIPES

Sr No	Item Description	Unit	Rate (in Rs.) 2019-2020
1	**Providing and Supplying Blue MDPE pipes** conforming to ISO 4427:1996 manufactured from virgin resin PE 80 Food grade compounded Raw Material having Blue Colour only with quality assurance certificate from quality agencies like WRC / CIPET (India) / DVGM / KIWA / SPGN etc. for usage in Drinking Water system. The cost shall include testing of all materials, Inspection charges, transportation up to store, transit insurance, loading, as specified and directed, unloading, stacking excluding GST levied by GOI & GOM in all respect, etc. complete as specified and directed.		
A)	**PN 16 (SDR 9)**		
i)	20 mm	Rmt	**23.00**
ii)	25 mm	Rmt	**31.00**
iii)	32 mm	Rmt	**51.00**
iv)	40 mm	Rmt	**75.00**
v)	50 mm	Rmt	**113.00**
vi)	63 mm	Rmt	**167.00**
vii)	75 mm	Rmt	**225.00**
viii)	90 mm	Rmt	**326.00**
ix)	110 mm	Rmt	**483.00**
x)	125 mm	Rmt	**624.00**
xi)	140 mm	Rmt	**784.00**
vii)	160 mm	Rmt	**1039.00**
viii)	180 mm	Rmt	**1316.00**
ix)	200 mm	Rmt	**1627.00**
x)	225 mm	Rmt	**2060.00**
xi)	250 mm	Rmt	**2534.00**
xii)	280 mm	Rmt	**3184.00**
xiii)	315 mm	Rmt	**4095.00**
B)	**PN 12.5 (SDR 11)**		
i)	25 mm	Rmt	**29.00**
ii)	32 mm	Rmt	**48.00**
iii)	40 mm	Rmt	**71.00**
iv)	50 mm	Rmt	**100.00**
v)	63 mm	Rmt	**135.00**
vi)	75 mm	Rmt	**188.00**
vii)	90 mm	Rmt	**273.00**
viii)	110 mm	Rmt	**401.00**
ix)	125 mm	Rmt	**523.00**
x)	140 mm	Rmt	**652.00**

Sr No	Item Description	Unit	Rate (in Rs.) 2019-2020
xi)	160 mm	Rmt	**854.00**
xii)	180 mm	Rmt	**1108.00**
vii)	200 mm	Rmt	**1357.00**
viii)	225 mm	Rmt	**1718.00**
ix)	250 mm	Rmt	**2128.00**
x)	280 mm	Rmt	**2652.00**
xi)	315 mm	Rmt	**3362.00**
C)	**PN 10 (SDR 13.6)**		
i)	63 mm	Rmt	**115.00**
ii)	75 mm	Rmt	**162.00**
iii)	90 mm	Rmt	**233.00**
iv)	110 mm	Rmt	**344.00**
v)	125 mm	Rmt	**443.00**
vi)	140 mm	Rmt	**556.00**
vii)	160 mm	Rmt	**726.00**
viii)	180 mm	Rmt	**919.00**
ix)	200 mm	Rmt	**1133.00**
x)	225 mm	Rmt	**1436.00**
xi)	250 mm	Rmt	**1767.00**
xii)	280 mm	Rmt	**2215.00**
vii)	315 mm	Rmt	**2798.00**
D)	**PN 8 (SDR 17)**		
i)	63 mm	Rmt	**92.00**
ii)	75 mm	Rmt	**131.00**
iii)	90 mm	Rmt	**189.00**
iv)	110 mm	Rmt	**280.00**
v)	125 mm	Rmt	**358.00**
vi)	140 mm	Rmt	**450.00**
vii)	160 mm	Rmt	**588.00**
viii)	180 mm	Rmt	**747.00**
ix)	200 mm	Rmt	**919.00**
x)	225 mm	Rmt	**1167.00**
xi)	250 mm	Rmt	**1463.00**
xii)	280 mm	Rmt	**1832.00**
xiii)	315 mm	Rmt	**2321.00**
E)	**PN 6 (SDR 21)**		
i)	63 mm	Rmt	**71.00**
ii)	75 mm	Rmt	**104.00**
iii)	90 mm	Rmt	**146.00**

Sr No	Item Description	Unit	Rate (in Rs.) 2019-2020
iv)	110 mm	Rmt	**221.00**
v)	125 mm	Rmt	**279.00**
vi)	140 mm	Rmt	**353.00**
vii)	160 mm	Rmt	**461.00**
viii)	180 mm	Rmt	**576.00**
ix)	200 mm	Rmt	**717.00**
x)	225 mm	Rmt	**907.00**
xi)	250 mm	Rmt	**1110.00**
xii)	280 mm	Rmt	**1403.00**
xiii)	315 mm	Rmt	**1764.00**
2	**Providing & Supply of Electro Fusion Fittings** in accordance with BS EN12201: Part-3 suitable for drinking water with in black/ blue colour manufactured from compounded PE80/ PE100 virgin polymer and compatible with PE80/PE100 pipes, in pressure rating SDR11 with min PN12.5 rated for water application and shall be inclusive of all cost such as testing, inspection charges, transportation up to store, transit insurance, loading, unloading,stacking excluding GST levied by GOI & GOM in all respect, etc. complete		
A)	**Couplers**		
	Couplers 20	No.	**87.00**
	Couplers 25	No.	**87.00**
	Couplers 32	No.	**87.00**
	Couplers 40	No.	**151.00**
	Couplers 50	No.	**188.00**
	Couplers 63	No.	**224.00**
	Couplers 75	No.	**379.00**
	Couplers 90	No.	**415.00**
	Couplers 110	No.	**577.00**
	Couplers 125	No.	**588.00**
	Couplers 140	No.	**1257.00**
	Couplers 160	No.	**1366.00**
	Couplers 180	No.	**1960.00**
	Couplers 200	No.	**2202.00**
	Couplers 225	No.	**2775.00**
	Couplers 250	No.	**4325.00**
	Couplers 280	No.	**4871.00**
	Couplers 315	No.	**5321.00**
		No.	
B)	**Equal Tee**		

Sr No	Item Description	Unit	Rate (in Rs.) 2019-2020
	Equal Tee 20	No.	**183.00**
	Equal Tee 25	No.	**183.00**
	Equal Tee 32	No.	**183.00**
	Equal Tee 40	No.	**404.00**
	Equal Tee 50	No.	**412.00**
	Equal Tee 63	No.	**674.00**
	Equal Tee 75	No.	**988.00**
	Equal Tee 90	No.	**1409.00**
	Equal Tee 110	No.	**1957.00**
	Equal Tee 125	No.	**2700.00**
	Equal Tee 160	No.	**4680.00**
	Equal Tee 180	No.	**5878.00**
	Equal Tee 200	No.	**9422.00**
	Equal Tee 225	No.	**10626.00**
	Equal Tee 250	No.	**15567.00**
C)	**Elbow 90 Deg.**		
	Elbow 90 Deg. 20	No.	**97.00**
	Elbow 90 Deg. 25	No.	**97.00**
	Elbow 90 Deg. 32	No.	**98.00**
	Elbow 90 Deg. 40	No.	**133.00**
	Elbow 90 Deg. 50	No.	**158.00**
	Elbow 90 Deg. 63	No.	**219.00**
	Elbow 90 Deg. 75	No.	**343.00**
	Elbow 90 Deg. 90	No.	**405.00**
	Elbow 90 Deg. 110	No.	**557.00**
	Elbow 90 Deg. 125	No.	**710.00**
	Elbow 90 Deg. 160	No.	**1554.00**
	Elbow 90 Deg. 180	No.	**1801.00**
	Elbow 90 Deg. 200	No.	**2331.00**
	Elbow 90 Deg. 225	No.	**5080.00**
	Elbow 90 Deg. 250	No.	**9519.00**
D)	**Elbow 45 Deg.**		
	Elbow 45 Deg. 32	No.	**104.00**
	Elbow 45 Deg. 40	No.	**126.00**
	Elbow 45 Deg. 50	No.	**150.00**
	Elbow 45 Deg. 63	No.	**209.00**
	Elbow 45 Deg. 75	No.	**326.00**
	Elbow 45 Deg. 90	No.	**385.00**
	Elbow 45 Deg. 110	No.	**557.00**
	Elbow 45 Deg. 125	No.	**710.00**

Sr No	Item Description	Unit	Rate (in Rs.) 2019-2020
	Elbow 45 Deg. 160	No.	**1308.00**
	Elbow 45 Deg. 180	No.	**1714.00**
	Elbow 45 Deg. 200	No.	**1801.00**
	Elbow 45 Deg. 225	No.	**2331.00**
	Elbow 45 Deg. 250	No.	**5080.00**
E)	**Reducer**		
	Reducer 25X20	No.	**131.00**
	Reducer 32X20	No.	**137.00**
	Reducer 32X25	No.	**144.00**
	Reducer 40X32	No.	**156.00**
	Reducer 50X32	No.	**156.00**
	Reducer 50X40	No.	**156.00**
	Reducer 63X32	No.	**188.00**
	Reducer 63X40	No.	**188.00**
	Reducer 63X50	No.	**188.00**
	Reducer 75 x 63	No.	**425.00**
	Reducer 90X63	No.	**467.00**
	Reducer 90X75	No.	**474.00**
	Reducer 110X50	No.	**576.00**
	Reducer 110X63	No.	**576.00**
	Reducer 110X75	No.	**606.00**
	Reducer 110X90	No.	**606.00**
	Reducer 125X90	No.	**673.00**
	Reducer 160X90	No.	**1129.00**
	Reducer 160X110	No.	**1191.00**
	Reducer 180X125	No.	**1483.00**
	Reducer 200X63	No.	**1712.00**
	Reducer 200X90	No.	**1828.00**
	Reducer 200X110	No.	**2123.00**
	Reducer 200X160	No.	**1758.00**
	Reducer 225X160	No.	**2571.00**
	Reducer 250X110	No.	**3297.00**
	Reducer 250X160	No.	**3551.00**
	Reducer 250X200	No.	**3883.00**
G)	**End Cap**		
	End Cap 20	No.	**34.00**
	End Cap 25	No.	**34.00**
	End Cap 32	No.	**48.00**
	End Cap 40	No.	**52.00**
	End Cap 50	No.	**55.00**
	End Cap 63	No.	**73.00**

Sr No	Item Description	Unit	Rate (in Rs.) 2019-2020
	End Cap 75	No.	**268.00**
	End Cap 90	No.	**305.00**
	End Cap 110	No.	**428.00**
	End Cap 125	No.	**543.00**
	End Cap 140	No.	**888.00**
	End Cap 160	No.	**962.00**
	End Cap 180	No.	**1055.00**
	End Cap 200	No.	**1788.00**
	End Cap 225	No.	**3071.00**
	End Cap 250	No.	**3958.00**
	End Cap 315	No.	**6548.00**
H)	**Ferrule tapping tee**		
	Ferrule tapping tee 63 x 1/2"	No.	**658.00**
	Ferrule tapping tee 63 x 3/4"	No.	**658.00**
	Ferrule tapping tee 63 x 1"	No.	**658.00**
	Ferrule tapping tee 75 x 1/2"	No.	**658.00**
	Ferrule tapping tee 75 x 3/4"	No.	**658.00**
	Ferrule tapping tee 75 x 1"	No.	**658.00**
	Ferrule tapping tee 90 x 1/2"	No.	**658.00**
	Ferrule tapping tee 90 x 3/4"	No.	**649.00**
	Ferrule tapping tee 90 x 1"	No.	**649.00**
	Ferrule tapping tee 90 x 11/4"	No.	**855.00**
	Ferrule tapping tee 90 x 11/2"	No.	**855.00**
	Ferrule tapping tee 90 x 2"	No.	**855.00**
	Ferrule tapping tee 110 x 1/2"	No.	**658.00**
	Ferrule tapping tee 110 x 3/4"	No.	**658.00**
	Ferrule tapping tee 110 x 1"	No.	**658.00**
	Ferrule tapping tee 110 x 11/4"	No.	**855.00**
	Ferrule tapping tee 100 x 11/2"	No.	**855.00**
	Ferrule tapping tee 110 x 2"	No.	**855.00**
	Ferrule tapping tee 160 x 1/2"	No.	**658.00**
	Ferrule tapping tee 160 x 3/4"	No.	**658.00**
	Ferrule tapping tee 160 x 1"	No.	**658.00**
	Ferrule tapping tee 160 x 11/4"	No.	**931.00**
	Ferrule tapping tee 160 x 11/2"	No.	**931.00**
	Ferrule tapping tee 160 x 2"	No.	**931.00**
	Ferrule tapping tee 200 x 1/2"	No.	**929.00**
	Ferrule tapping tee 200 x 3/4"	No.	**929.00**
	Ferrule tapping tee 200 x 1"	No.	**929.00**
	Ferrule tapping tee 200 x 11/4"	No.	**1340.00**
	Ferrule tapping tee 200 x 11/2"	No.	**1340.00**
	Ferrule tapping tee 200 x 2"	No.	**1340.00**
	Ferrule tapping tee 250 x 1/2"	No.	**929.00**
	Ferrule tapping tee 250 x 3/4"	No.	**929.00**
	Ferrule tapping tee 250 x 1"	No.	**929.00**
	Ferrule tapping tee 250 x 11/4"	No.	**1340.00**
	Ferrule tapping tee 250 x 11/2"	No.	**1340.00**
	Ferrule tapping tee 250 x 2"	No.	**1340.00**
	Ferrule tapping tee 315 x 1/2"	No.	**1106.00**

Sr No	Item Description	Unit	Rate (in Rs.) 2019-2020
	Ferrule tapping tee 315 x 3/4"	No.	**1106.00**
	Ferrule tapping tee 315 x 1"	No.	**1106.00**
	Ferrule tapping tee 315 x 11/4"	No.	**1502.00**
	Ferrule tapping tee 315 x 11/2"	No.	**1502.00**
	Ferrule tapping tee 315 x 2"	No.	**1502.00**
3	**Providing & Supply of Compression fittings,** PN16 rated in conformation to ISO:14236-2000 and shall be tested as per ISO:3459, ISO:3501 & ISO:3503, suitable for drinking water & approved by WRAS, UK/KIWA etc, in food grade polypropylene and shall be inclusive of all cost such as testing, inspection charges, transportation up to store, transit insurance, loading, unloading, stacking excluding GST levied by GOI & GOM in all respect, etc. complete.		
A)	**Male Adaptor**		
i)	Male Adaptor 20x1/2"	No.	**54.00**
ii)	Male Adaptor 25x3/4"	No.	**62.00**
iii)	Male Adaptor 32x1"	No.	**80.00**
iv)	Male Adaptor 40x1 1/4"	No.	**146.00**
v)	Male Adaptor 50x1 1/2"	No.	**192.00**
vi)	Male Adaptor 63x2"	No.	**273.00**
B)	**Female Adaptor**		
i)	Female Adaptor 20x1/2"	No	**58.00**
ii)	Female Adaptor 25x3/4"	No	**68.00**
iii)	Female Adaptor 32x1"	No	**86.00**
iv)	Female Adaptor 40x1 1/4"	No	**161.00**
v)	Female Adaptor 50x1 1/2"	No	**205.00**
vi)	Female Adaptor 63x2"	No	**290.00**
C)	**Coupling**		
i)	Coupling 20x20	No.	**56.00**
ii)	Coupling 25x25	No.	**61.00**
iii)	Coupling 32x32	No.	**78.00**
iv)	Coupling 40x40	No.	**148.00**
v)	Coupling 50x50	No.	**191.00**
vi)	Coupling 63x63	No.	**276.00**
D)	**Reducing Coupling**		
i)	Reducing Coupling 25x20	No.	**102.00**
ii)	Reducing Coupling 32x20	No.	**135.00**
iii)	Reducing Coupling 32x25	No.	**135.00**
iv)	Reducing Coupling 40x25	No.	**230.00**
v)	Reducing Coupling 40x32	No.	**230.00**
vi)	Reducing Coupling 50x32	No.	**297.00**
vii)	Reducing Coupling 50x40	No.	**297.00**
viii)	Reducing Coupling 63x50	No.	**422.00**

Sr No	Item Description	Unit	Rate (in Rs.) 2019-2020
E)	**90 Deg. Elbow**		
i)	90 Deg. Elbow 20	No.	**104.00**
ii)	90 Deg. Elbow 25	No.	**124.00**
iii)	90 Deg. Elbow 32	No.	**151.00**
iv)	90 Deg. Elbow 40	No.	**248.00**
v)	90 Deg. Elbow 50	No.	**352.00**
vi)	90 Deg. Elbow 63	No.	**477.00**
F)	**90 Deg. Elbow threaded male off take**		
i)	90 Deg. Elbow threaded male off take 20x1/2"	No.	**62.00**
ii)	90 Deg. Elbow threaded male off take 25x3/4"	No.	**76.00**
iii)	90 Deg. Elbow threaded male off take 32x1"	No.	**98.00**
iv)	90 Deg. Elbow threaded male off take 40x11/4"	No.	**156.00**
v)	90 Deg. Elbow threaded male off take 50x11/2"	No.	**214.00**
vi)	90 Deg. Elbow threaded male off take 63x2"	No.	**297.00**
G)	**90 Deg. Elbow threaded female off take**		
i)	90 Deg. Elbow threaded female off take 20x1/2"	No.	**71.00**
ii)	90 Deg. Elbow threaded female off take 25x3/4"	No.	**87.00**
iii)	90 Deg. Elbow threaded female off take 32x1"	No.	**105.00**
iv)	90 Deg. Elbow threaded female off take 40x11/4"	No.	**204.00**
v)	90 Deg. Elbow threaded female off take 50x11/2"	No.	**267.00**
vi)	90 Deg. Elbow threaded female off take 63x2"	No.	**352.00**
H)	**Equal Tee**		
i)	Equal Tee 20x20x20	No.	**124.00**
ii)	Equal Tee 25x25x25	No.	**162.00**
iii)	Equal Tee 32x32x32	No.	**209.00**
iv)	Equal Tee 40x40x40	No.	**347.00**
v)	Equal Tee 50x50x50	No.	**469.00**
vi)	Equal Tee 63x63x63	No.	**667.00**
I)	**End Cap**		
i)	End Cap 20	No.	**31.00**
ii)	End Cap 25	No.	**31.00**
iii)	End Cap 32	No.	**44.00**
iv)	End Cap 40	No.	**48.00**
v)	End Cap 50	No.	**50.00**
vi)	End Cap 63	No.	**67.00**

Section - I- (XI) - P.C.C. PIPES

Sr No	Item Description	Unit	Rate (in Rs.) 2019-2020
1	**Providing and Supplying Prestressed Concrete Cylinder Pipes** suitable for sliding ovrelap weld joint or confined rubber ring joint with necessary rubber ring of following class and diameter including cost of transportation, inspection charges to store, transit insurance,unloading and stacking excluding GST levied by GOI & GOM in all respect etc. complete.		
	Note: 1) Class mentioned below represents the working pressure of pipe.		
	2) For external coating at site to the joints, necessary polythene wrapping for pouring cement slurry shall also be given free with each pipe.		
	i)Factory test pressure-		
	a)Site test pressure + 0.1N/mm2,For working Pressure upto 1 N/mm2		
	b) Site test pressure + 0.2N/mm2,For working Pressure above 1 N/mm2		
	ii) Site test pressure-1.5 times working pressure pertaining to the section or 1.1 times static pressure,which ever is		
	more (such pressure is to be control within 25% of pumphead incase of pumping main)		
	iii) Working pressure-The maximum sustained internal pressure excluding surge to which each portion of pipeline may be subjected when installed		
a)	**Factory Test Pressure - 4 kg/Sq.cm.**		
i)	350 mm	Rmt	**4445.00**
ii)	400 mm	Rmt	**4886.00**
iii)	450 mm	Rmt	**5368.00**
iv)	500 mm	Rmt	**5940.00**
v)	600 mm	Rmt	**7183.00**
vi)	700 mm	Rmt	**8298.00**
vii)	800 mm	Rmt	**9345.00**
viii)	900 mm	Rmt	**11452.00**
ix)	1000 mm	Rmt	**13225.00**
x)	1100 mm	Rmt	**14807.00**
xi)	1200 mm	Rmt	**16279.00**
xii)	1300 mm	Rmt	**18809.00**
xiii)	1400 mm	Rmt	**20425.00**
xiv)	1500 mm	Rmt	**22853.00**

Sr No	Item Description	Unit	Rate (in Rs.) 2019-2020
xv)	1600 mm	Rmt	**24393.00**
xvii)	1700mm	Rmt	**25935.00**
xviii)	1800mm	Rmt	**27473.00**
b	**Factory Test Pressure - 5.5 kg/Sq.cm.**		
i)	350 mm	Rmt	**4445.00**
ii)	400 mm	Rmt	**4909.00**
iii)	450 mm	Rmt	**5397.00**
iv)	500 mm	Rmt	**5974.00**
v)	600 mm	Rmt	**7233.00**
vi)	700 mm	Rmt	**8364.00**
vii)	800 mm	Rmt	**9453.00**
viii)	900 mm	Rmt	**11558.00**
ix)	1000 mm	Rmt	**13355.00**
x)	1100 mm	Rmt	**14978.00**
xi)	1200 mm	Rmt	**17086.00**
xii)	1300 mm	Rmt	**19086.00**
xiii)	1400 mm	Rmt	**20779.00**
xiv)	1500 mm	Rmt	**23223.00**
xv)	1600 mm	Rmt	**24764.00**
xvii)	1700mm	Rmt	**26304.00**
xviii)	1800mm	Rmt	**27845.00**
c)	**Factory Test Pressure - 7.0 kg/Sq.cm.**		
i)	350 mm	Rmt	**4455.00**
ii)	400 mm	Rmt	**4929.00**
iii)	450 mm	Rmt	**5421.00**
iv)	500 mm	Rmt	**6006.00**
v)	600 mm	Rmt	**7281.00**
vi)	700 mm	Rmt	**8443.00**
vii)	800 mm	Rmt	**9588.00**
viii)	900 mm	Rmt	**11706.00**
ix)	1000 mm	Rmt	**13558.00**
x)	1100 mm	Rmt	**15225.00**
xi)	1200 mm	Rmt	**17382.00**
xii)	1300 mm	Rmt	**19437.00**
xiii)	1400 mm	Rmt	**21361.00**
xiv)	1500 mm	Rmt	**23257.00**
xv)	1600 mm	Rmt	**24798.00**
xvii)	1700mm	Rmt	**26341.00**

Sr No	Item Description	Unit	Rate (in Rs.) 2019-2020
xviii)	1800mm	Rmt	**27880.00**
d)	**Factory Test Pressure - 8.5 kg/Sq.cm.**		
i)	350 mm	Rmt	**4473.00**
ii)	400 mm	Rmt	**4957.00**
iii)	450 mm	Rmt	**5449.00**
iv)	500 mm	Rmt	**6040.00**
v)	600 mm	Rmt	**7346.00**
vi)	700 mm	Rmt	**8542.00**
vii)	800 mm	Rmt	**9724.00**
viii)	900 mm	Rmt	**11872.00**
ix)	1000 mm	Rmt	**13761.00**
x)	1100 mm	Rmt	**15472.00**
xi)	1200 mm	Rmt	**17829.00**
xii)	1300 mm	Rmt	**19949.00**
xiii)	1400 mm	Rmt	**21768.00**
xiv)	1500 mm	Rmt	**23681.00**
xv)	1600 mm	Rmt	**25221.00**
xvii)	1700mm	Rmt	**26762.00**
xviii)	1800mm	Rmt	**28302.00**
e)	**Factory Test Pressure - 10 kg/Sq.cm.**		
i)	350 mm	Rmt	**4489.00**
ii)	400 mm	Rmt	**4976.00**
iii)	450 mm	Rmt	**5484.00**
iv)	500 mm	Rmt	**6091.00**
v)	600 mm	Rmt	**7416.00**
vi)	700 mm	Rmt	**8638.00**
vii)	800 mm	Rmt	**9870.00**
viii)	900 mm	Rmt	**12037.00**
ix)	1000 mm	Rmt	**13963.00**
x)	1100 mm	Rmt	**15860.00**
xi)	1200 mm	Rmt	**18130.00**
xii)	1300 mm	Rmt	**20305.00**
xiii)	1400 mm	Rmt	**22184.00**
xiv)	1500 mm	Rmt	**24115.00**
xv)	1600 mm	Rmt	**25659.00**
xvii)	1700mm	Rmt	**27199.00**
xviii)	1800mm	Rmt	**28739.00**

Sr No	Item Description	Unit	Rate (in Rs.) 2019-2020
f)	**Factory Test Pressure - 11.5 kg/Sq.cm.**		
i)	350 mm	Rmt	**4507.00**
ii)	400 mm	Rmt	**5007.00**
iii)	450 mm	Rmt	**5524.00**
iv)	500 mm	Rmt	**6142.00**
v)	600 mm	Rmt	**7491.00**
vi)	700 mm	Rmt	**8736.00**
vii)	800 mm	Rmt	**10145.00**
viii)	900 mm	Rmt	**11140.00**
ix)	1000 mm	Rmt	**14168.00**
x)	1100 mm	Rmt	**16113.00**
xi)	1200 mm	Rmt	**18434.00**
xii)	1300 mm	Rmt	**20665.00**
xiii)	1400 mm	Rmt	**22605.00**
xiv)	1500 mm	Rmt	**24554.00**
xv)	1600 mm	Rmt	**26094.00**
xvii)	1700mm	Rmt	**27635.00**
xviii)	1800mm	Rmt	**29176.00**
g)	**Factory Test Pressure - 13.0 kg/Sq.cm.**		
i)	350 mm	Rmt	**4542.00**
ii)	400 mm	Rmt	**5048.00**
iii)	450 mm	Rmt	**5570.00**
iv)	500 mm	Rmt	**6193.00**
v)	600 mm	Rmt	**7563.00**
vi)	700 mm	Rmt	**8835.00**
vii)	800 mm	Rmt	**10314.00**
viii)	900 mm	Rmt	**12367.00**
ix)	1000 mm	Rmt	**14465.00**
x)	1100 mm	Rmt	**16369.00**
xi)	1200 mm	Rmt	**18744.00**
xii)	1300 mm	Rmt	**21029.00**
xiii)	1400 mm	Rmt	**23020.00**
xiv)	1500 mm	Rmt	**24988.00**
xv)	1600 mm	Rmt	**26530.00**
xvii)	1700mm	Rmt	**28069.00**
xviii)	1800mm	Rmt	**29598.00**
h)	**Factory Test Pressure - 14.5 kg/Sq.cm.**		
i)	350 mm	Rmt	**4582.00**

Sr No	Item Description	Unit	Rate (in Rs.) 2019-2020
ii)	400 mm	Rmt	**5094.00**
iii)	450 mm	Rmt	**5627.00**
iv)	500 mm	Rmt	**6252.00**
v)	600 mm	Rmt	**7640.00**
vi)	700 mm	Rmt	**9417.00**
vii)	800 mm	Rmt	**10481.00**
viii)	900 mm	Rmt	**12654.00**
ix)	1000 mm	Rmt	**14677.00**
x)	1100 mm	Rmt	**16624.00**
xi)	1200 mm	Rmt	**19048.00**
xii)	1300 mm	Rmt	**21387.00**
xiii)	1400 mm	Rmt	**24059.00**
xiv)	1500 mm	Rmt	**26072.00**
xv)	1600 mm	Rmt	**27614.00**
xvii)	1700mm	Rmt	**29154.00**
xviii)	1800mm	Rmt	**30694.00**
i)	**Factory Test Pressure - 17.0 kg/Sq.cm.**		
i)	350 mm	Rmt	**4618.00**
ii)	400 mm	Rmt	**5141.00**
iii)	450 mm	Rmt	**5683.00**
iv)	500 mm	Rmt	**6321.00**
v)	600 mm	Rmt	**7739.00**
vi)	700 mm	Rmt	**9038.00**
vii)	800 mm	Rmt	**10684.00**
viii)	900 mm	Rmt	**12834.00**
ix)	1000 mm	Rmt	**14891.00**
x)	1100 mm	Rmt	**16894.00**
xi)	1200 mm	Rmt	**19359.00**
xii)	1300 mm	Rmt	**21753.00**
xiii)	1400 mm	Rmt	**24522.00**
xiv)	1500 mm	Rmt	**26558.00**
xv)	1600 mm	Rmt	**28098.00**
xvii)	1700mm	Rmt	**29640.00**
xviii)	1800mm	Rmt	**31180.00**
j)	**Factory Test Pressure - 18.5 kg/Sq.cm.**		
i)	350 mm	Rmt	**4653.00**
ii)	400 mm	Rmt	**5187.00**
iii)	450 mm	Rmt	**5741.00**
iv)	500 mm	Rmt	**6390.00**

Sr No	Item Description	Unit	Rate (in Rs.) 2019-2020
v)	600 mm	Rmt	**7836.00**
vi)	700 mm	Rmt	**9151.00**
vii)	800 mm	Rmt	**11035.00**
viii)	900 mm	Rmt	**13058.00**
ix)	1000 mm	Rmt	**15146.00**
x)	1100 mm	Rmt	**17157.00**
xi)	1200 mm	Rmt	**19669.00**
xii)	1300 mm	Rmt	**22798.00**
xiii)	1400 mm	Rmt	**25159.00**
xiv)	1500 mm	Rmt	**26673.00**
xv)	1600 mm	Rmt	**28215.00**
xvii)	1700mm	Rmt	**29756.00**
xviii)	1800mm	Rmt	**31296.00**
k)	**Factory Test Pressure - 20 kg/Sq.cm.**		
i)	350 mm	Rmt	**4690.00**
ii)	400 mm	Rmt	**5235.00**
iii)	450 mm	Rmt	**5798.00**
iv)	500 mm	Rmt	**6463.00**
v)	600 mm	Rmt	**7934.00**
vi)	700 mm	Rmt	**9378.00**
vii)	800 mm	Rmt	**11299.00**
viii)	900 mm	Rmt	**13356.00**
ix)	1000 mm	Rmt	**15497.00**
x)	1100 mm	Rmt	**17564.00**
xi)	1200 mm	Rmt	**20698.00**
xii)	1300 mm	Rmt	**23288.00**
xiii)	1400 mm	Rmt	**25715.00**
xiv)	1500 mm	Rmt	**27253.00**
xv)	1600 mm	Rmt	**28794.00**
xvii)	1700mm	Rmt	**30335.00**
xviii)	1800mm	Rmt	**31875.00**
l)	**Factory Test Pressure - 21.5 kg/Sq.cm.**		
i)	350 mm	Rmt	**4732.00**
ii)	400 mm	Rmt	**5282.00**
iii)	450 mm	Rmt	**5854.00**
iv)	500 mm	Rmt	**6531.00**
v)	600 mm	Rmt	**8050.00**
vi)	700 mm	Rmt	**9837.00**
vii)	800 mm	Rmt	**11479.00**
viii)	900 mm	Rmt	**13654.00**
ix)	1000 mm	Rmt	**15851.00**
x)	1100 mm	Rmt	**18448.00**
xi)	1200 mm	Rmt	**21211.00**
xii)	1300 mm	Rmt	**23829.00**
xiii)	1400 mm	Rmt	**27126.00**
xiv)	1500 mm	Rmt	**28725.00**

Sr No	Item Description	Unit	Rate (in Rs.) 2019-2020
xv)	1600 mm	Rmt	**30269.00**
xvii)	1700mm	Rmt	**31809.00**
xviii)	1800mm	Rmt	**33351.00**
m)	**Factory Test Pressure - 23 kg/Sq.cm.**		
i)	350 mm	Rmt	**4767.00**
ii)	400 mm	Rmt	**5327.00**
iii)	450 mm	Rmt	**5914.00**
iv)	500 mm	Rmt	**6600.00**
v)	600 mm	Rmt	**8219.00**
vi)	700 mm	Rmt	**10148.00**
vii)	800 mm	Rmt	**11831.00**
viii)	900 mm	Rmt	**13949.00**
ix)	1000 mm	Rmt	**16203.00**
x)	1100 mm	Rmt	**18937.00**
xi)	1200 mm	Rmt	**21735.00**
xii)	1300 mm	Rmt	**24505.00**
xiii)	1400 mm	Rmt	**27630.00**
xiv)	1500 mm	Rmt	**29250.00**
xv)	1600 mm	Rmt	**30792.00**
xvii)	1700mm	Rmt	**32333.00**
xviii)	1800mm	Rmt	**33871.00**
n)	**Factory Test Pressure - 24.5 kg/Sq.cm.**		
i)	350 mm	Rmt	**4804.00**
ii)	400 mm	Rmt	**5376.00**
iii)	450 mm	Rmt	**5972.00**
iv)	500 mm	Rmt	**6672.00**
v)	600 mm	Rmt	**8549.00**
vi)	700 mm	Rmt	**10287.00**
vii)	800 mm	Rmt	**11844.00**
viii)	900 mm	Rmt	**14186.00**
ix)	1000 mm	Rmt	**16963.00**
x)	1100 mm	Rmt	**19427.00**
xi)	1200 mm	Rmt	**22262.00**
xii)	1300 mm	Rmt	**26448.00**
xiii)	1400 mm	Rmt	**28157.00**
xiv)	1500 mm	Rmt	**29798.00**
xv)	1600 mm	Rmt	**31339.00**
xvii)	1700mm	Rmt	**32878.00**
xviii)	1800mm	Rmt	**34420.00**

Note :

1) For PCCP pipes lowering, laying, and pouring of cement mortar in the field on joints (after laying and welding), rates as per PSC pipes lowering, laying and jointing shall be adopted.

2) For field welding rates applicable for similar welding in MS pipes given in that section shall be adopted.

Sr No	Item Description	Unit	Rate (in Rs.) 2019-2020

3) Whenever manufacturer is separate and contractor for lowering, laying, jointing and testing is separate the principal contractor shall enter into an agreement with PCCP pipe manufacturer for satisfactory manufacturing transporting, lowering, laying, jointing and testing of pipes.

Above Notes shall appear in the tender conditions.

4) Only 85% providing rates shall be payable till satisfactory Hydraulic testing is given.

Section - I- (XII) - PIPE APPURTENANCES

Sr No	Item Description	Unit	Rate (in Rs.) 2019-2020	
1	**Providing and supplying ISI mark CI D/F reflux valves (non-return valves)** of following dia including railway freight, inspection charges, unloading from railway wagon, loading into truck, transportation upto departmental stores, unloading, stacking excluding GST levied by GOI & GOM in all respect etc. complete.**Reflux valves as per I.S.5312 Part I (1984)**			
a)	**Without by pass arrangement -PN -1**			
i)	50 mm	No	**3102.00**	
ii)	65 mm	No	**3631.00**	
iii)	80 mm	No	**3824.00**	
iv)	100 mm	No	**5339.00**	
v)	125 mm	No	**7623.00**	
vi)	150 mm	No	**9230.00**	
vii)	200 mm	No	**16590.00**	
viii)	250 mm	No	**28312.00**	
ix)	300 mm	No	**38794.00**	
x)	350 mm	No	**60343.00**	
xi)	400 mm	No	**71777.00**	
xii)	450 mm	No	**103211.00**	
xiii)	500 mm	No	**152929.00**	
xiv)	600 mm	No	**187271.00**	
xv)	700 mm	No	**439275.00**	
b)	**With by pass arrangement - PN-1**			
i)	80 mm	No	**4415.00**	
ii)	100 mm	No	**6290.00**	
iii)	125 mm	No	**8565.00**	
iv)	150 mm	No	**10171.00**	
v)	200 mm	No	**18963.00**	
vi)	250 mm	No	**30996.00**	
vii)	300 mm	No	**41606.00**	
viii)	350 mm	No	**68214.00**	
ix)	400 mm	No	**82545.00**	
x)	450 mm	No	**107098.00**	
xi)	500 mm	No	**173812.00**	
xii)	600 mm	No	**215361.00**	
xiii)	700 mm	No	**664985.00**	
xiv)	750 mm	No	**727888.00**	
xv)	800 mm	No	**790792.00**	
xvi)	900 mm	No	**862683.00**	
xvii)	1000 mm	No	**1006464.00**	

Sr No	Item Description	Unit	Rate (in Rs.) 2019-2020	
c)	**Without by pass**			
	arrangement - PN -1.6			
i)	50 mm	No	**3025.00**	
ii)	65 mm	No	**3268.00**	
iii)	80 mm	No	**5361.00**	
iv)	100 mm	No	**6867.00**	
v)	125 mm	No	**9567.00**	
vi)	150 mm	No	**13005.00**	
vii)	200 mm	No	**22770.00**	
viii)	250 mm	No	**36554.00**	
ix)	300 mm	No	**49420.00**	
x)	350 mm	No	**75429.00**	
xi)	400 mm	No	**89722.00**	
xii)	450 mm	No	**119948.00**	
xiii)	500 mm	No	**191160.00**	
xiv)	600 mm	No	**234088.00**	
xv)	700 mm	No	**345994.00**	
xvi)	750 mm	No	**397187.00**	
xvii)	800 mm	No	**451912.00**	
xviii)	900 mm	No	**571949.00**	
xix)	1000 mm	No	**706111.00**	
xx)	1100 mm	No	**854392.00**	
xxi)	1200 mm	No	**1017173.00**	
d)	**With by pass arrangement - PN-1.6**			
i)	50 mm	No	**3105.00**	
ii)	65 mm	No	**3495.00**	
iii)	80 mm	No	**5143.00**	
iv)	100 mm	No	**6650.00**	
v)	125 mm	No	**9293.00**	
vi)	150 mm	No	**11279.00**	
vii)	200 mm	No	**22782.00**	
viii)	250 mm	No	**34426.00**	
ix)	300 mm	No	**52012.00**	
x)	350 mm	No	**80367.00**	
xi)	400 mm	No	**103181.00**	
xii)	450 mm	No	**123163.00**	
xiii)	500 mm	No	**199917.00**	
xiv)	600 mm	No	**269201.00**	
xv)	700 mm	No	**352410.00**	
xvi)	750 mm	No	**404553.00**	
xvii)	800 mm	No	**460292.00**	
xviii)	900 mm	No	**582557.00**	
xix)	1000 mm	No	**719204.00**	
xx)	1100 mm	No	**870238.00**	
xxi)	1200 mm	No	**1035654.00**	

Sr No	Item Description	Unit	Rate (in Rs.) 2019-2020	
2	**Providing double flange sluice valve** confirming for IS-14846 including worn gear arrangements as per test pressure, stainless steel spindle, caps, including inspection charges, transportation upto departmental store, unloading,stacking excluding GST levied by GOI & GOM in all respect etc. complete.			
a)	**Sluice valves - PN -1 without byepass arrangement**			
i)	50 mm	No	**3923.00**	
ii)	65 mm	No	**4641.00**	
iii)	80 mm	No	**4796.00**	
iv)	100 mm	No	**6388.00**	
v)	125 mm	No	**7989.00**	
vi)	150 mm	No	**9580.00**	
vii)	200 mm	No	**17365.00**	
viii)	250 mm	No	**26848.00**	
ix)	300 mm	No	**34085.00**	
x)	350 mm	No	**50141.00**	
xi)	400 mm	No	**66014.00**	
xii)	450 mm	No	**70972.00**	
xiii)	500 mm	No	**102290.00**	
xiv)	600 mm	No	**151547.00**	
xv)	700 mm	No	**281691.00**	
xvi)	750 mm	No	**319114.00**	
xvii)	800 mm	No	**389272.00**	
xviii)	900 mm	No	**510436.00**	
xix)	1000 mm	No	**763408.00**	
xx)	1100 mm	No	**978703.00**	
xxi)	1200 mm	No	**1157135.00**	
	With byepass arrangement			
b)	**Sluice valves - PN -1.0**			
i)	50 mm	No	**4117.00**	
ii)	65 mm	No	**4651.00**	
iii)	80 mm	No	**4796.00**	
iv)	100 mm	No	**6388.00**	
v)	125 mm	No	**7989.00**	
vi)	150 mm	No	**10089.00**	
vii)	200 mm	No	**17397.00**	
viii)	250 mm	No	**26879.00**	
ix)	300 mm	No	**34115.00**	
x)	350 mm	No	**52005.00**	
xi)	400 mm	No	**66112.00**	
xii)	450 mm	No	**81511.00**	
xiii)	500 mm	No	**102443.00**	
xiv)	600 mm	No	**151771.00**	
xv)	700 mm	No	**286437.00**	

Sr No	Item Description	Unit	Rate (in Rs.) 2019-2020	
xvi)	750 mm	No	**319431.00**	
xvii)	800 mm	No	**389656.00**	
xviii)	900 mm	No	**510941.00**	
xix)	1000 mm	No	**775059.00**	
xx)	1100 mm	No	**979672.00**	
xxi)	1200 mm	No	**1158240.00**	
c)	**Sluice valve - PN - 1.6**			
	without byepass arrangement			
i)	50 mm	No	**4917.00**	
ii)	65 mm	No	**5800.00**	
iii)	80 mm	No	**6316.00**	
iv)	100 mm	No	**8416.00**	
v)	125 mm	No	**10515.00**	
vi)	150 mm	No	**11152.00**	
vii)	200 mm	No	**21711.00**	
viii)	250 mm	No	**33569.00**	
ix)	300 mm	No	**42629.00**	
x)	350 mm	No	**64910.00**	
xi)	400 mm	No	**82403.00**	
xii)	450 mm	No	**101829.00**	
xiii)	500 mm	No	**127794.00**	
xiv)	600 mm	No	**189388.00**	
xv)	700 mm	No	**286861.00**	
xvi)	750 mm	No	**319904.00**	
xvii)	800 mm	No	**390235.00**	
xviii)	900 mm	No	**511699.00**	
xix)	1000 mm	No	**789331.00**	
xx)	1100 mm	No	**981127.00**	
xxi)	1200 mm	No	**1159998.00**	
d)	**Sluice valve - PN - 1.6**			
	with byepass arrangement			
i)	50 mm	No	**5442.00**	
ii)	65 mm	No	**5811.00**	
iii)	80 mm	No	**6327.00**	
iv)	100 mm	No	**8432.00**	
v)	125 mm	No	**10530.00**	
vi)	150 mm	No	**12610.00**	
vii)	200 mm	No	**21742.00**	
viii)	250 mm	No	**33601.00**	
ix)	300 mm	No	**42659.00**	
x)	350 mm	No	**65006.00**	
xi)	400 mm	No	**82526.00**	
xii)	450 mm	No	**101980.00**	
xiii)	500 mm	No	**127983.00**	
xiv)	600 mm	No	**189670.00**	

Sr No	Item Description	Unit	Rate (in Rs.) 2019-2020	
xv)	700 mm	No	**287216.00**	
xvi)	750 mm	No	**320299.00**	
xvii)	800 mm	No	**390718.00**	
xviii)	900 mm	No	**512332.00**	
xix)	1000 mm	No	**790305.00**	
xx)	1100 mm	No	**982337.00**	
xxi)	1200 mm	No	**1161432.00**	
3	**Providing, double flanged short body pattern type manually operated Butterfly Valve** having body, disc and end cover in graded cast iron to IS-210 Gr.CF 200 generally confirming to IS-13095-1991, Synthetic rubber faced ring secured on disc by retaining ring with stainless steel screw stub shaft of stainless steel riding in teflon bearing including inspection charges, transportation up to departmental store, unloading, stacking excluding GST levied by GOI & GOM in all respect etc. excluding C.C. foundation /structural steel support.			
a)	**Butterfly valves - PN -1 with byepass arrangement**			
iii)	80 mm	No	**5445.00**	
iv)	100 mm	No	**6961.00**	
v)	125 mm	No	**7939.00**	
vi)	150 mm	No	**10262.00**	
vii)	200 mm	No	**13675.00**	
viii)	250 mm	No	**17093.00**	
ix)	300 mm	No	**27046.00**	
x)	350 mm	No	**44378.00**	
xi)	400 mm	No	**55057.00**	
xii)	450 mm	No	**64265.00**	
xiii)	500 mm	No	**69421.00**	
xiv)	600 mm	No	**81299.00**	
xv)	700 mm	No	**121901.00**	
xvi)	750 mm	No	**144366.00**	
xvii)	800 mm	No	**153756.00**	
xviii)	900 mm	No	**197398.00**	
xix)	1000 mm	No	**254482.00**	
xx)	1100 mm	No	**545472.00**	
xxi)	1200 mm	No	**516163.00**	
xxii)	1400 mm	No	**787015.00**	
xxiii)	1500 mm	No	**977904.00**	
b)	**Butterfly valves - PN -1.6**			
	Without byepass arrangement			
iii)	80 mm	No	**6042.00**	
iv)	100 mm	No	**7911.00**	
v)	125 mm	No	**8735.00**	
vi)	150 mm	No	**11800.00**	
vii)	200 mm	No	**15729.00**	
viii)	250 mm	No	**19657.00**	
ix)	300 mm	No	**31103.00**	
x)	350 mm	No	**55472.00**	
xi)	400 mm	No	**67955.00**	
xii)	450 mm	No	**78510.00**	
xiii)	500 mm	No	**86205.00**	

Sr No	Item Description	Unit	Rate (in Rs.) 2019-2020	
xiv)	600 mm	No	**101624.00**	
xv)	700 mm	No	**152376.00**	
xvi)	750 mm	No	**180457.00**	
xvii)	800 mm	No	**192196.00**	
xviii)	900 mm	No	**246748.00**	
xix)	1000 mm	No	**318102.00**	
xx)	1100 mm	No	**645207.00**	
xxi)	1200 mm	No	**681832.00**	
xxii)	1400 mm	No	**983769.00**	
xxiii)	1500 mm	No	**1214115.00**	
4	**Lowering, laying and jointing in position following C.I.D/F Reflex valves, Butterfly valves and Sluice valves** including cost of all labour jointing material, including nut bolts and giving satisfactory hydraulic testing etc. complete. (Rate for all class of valves.)			
i)	50 mm	No	**757.00**	
ii)	65 mm	No	**1137.00**	
iii)	80 mm	No	**1580.00**	
iv)	100 mm	No	**2065.00**	
v)	125 mm	No	**2571.00**	
vi)	150 mm	No	**3245.00**	
vii)	200 mm	No	**3376.00**	
viii)	250 mm	No	**4399.00**	
ix)	300 mm	No	**4563.00**	
x)	350 mm	No	**5623.00**	
xi)	400 mm	No	**6784.00**	
xii)	450 mm	No	**8072.00**	
xiii)	500 mm	No	**8358.00**	
xiv)	600 mm	No	**8872.00**	
xv)	700 mm	No	**9565.00**	
xvi)	750 mm	No	**10534.00**	
xvii)	800 mm	No	**12552.00**	
xviii)	900 mm	No	**13319.00**	
xix)	1000 mm	No	**15701.00**	
xx)	1100 mm	No	**18130.00**	
xxi)	1200 mm to 1500 mm	No	**19923.00**	
b	**Giving satisfactory hydraulic testing of following C.I. D / F Reflex valves, Butterfly valves and Sluice valves.**			
i)	50 mm	No	**85.00**	
ii)	65 mm	No	**127.00**	
iii)	80 mm	No	**176.00**	
iv)	100 mm	No	**229.00**	
v)	125 mm	No	**285.00**	
vi)	150 mm	No	**361.00**	
vii)	200 mm	No	**375.00**	
viii)	250 mm	No	**488.00**	
ix)	300 mm	No	**507.00**	
x)	350 mm	No	**625.00**	
xi)	400 mm	No	**755.00**	
xii)	450 mm	No	**897.00**	
xiii)	500 mm	No	**930.00**	
xiv)	600 mm	No	**986.00**	
xv)	700 mm	No	**1064.00**	

Sr No	Item Description	Unit	Rate (in Rs.) 2019-2020	
xvi)	750 mm	No	**1170.00**	
xvii)	800 mm	No	**1395.00**	
xviii)	900 mm	No	**1481.00**	
xix)	1000 mm	No	**1745.00**	
xx)	1100 mm	No	**2015.00**	
xxi)	1200 mm to 1500 mm	No	**2213.00**	
5	**Providing and supplying Air Valves** as per IS-14845-2000 and MJP's standard specifications of approved make and quality of following diameters including railway freight, inspection charges, unloading from railway wagons, loading into truck, transportation upto departmental stores, unloding and stacking excluding GST levied by GOI & GOM in all respect etc. complete.			
a)	**Air Valve Single Ball Flanged / Screwed Type - PN -1**			
i)	12/15 mm	No	**592.00**	
ii)	20 mm	No	**714.00**	
iii)	25 mm	No	**985.00**	
iv)	32 mm	No	**1076.00**	
v)	40 mm	No	**1184.00**	
vi)	50 mm	No	**1300.00**	
b)	**Air Valve Single Ball Flanged /Screwed Type -PN -1.6**			
i)	12/15 mm	No	**693.00**	
ii)	20 mm	No	**985.00**	
iii)	25 mm	No	**1184.00**	
iv)	32 mm	No	**1276.00**	
v)	40 mm	No	**1367.00**	
vi)	50 mm	No	**1784.00**	
6	**Providing and supplying Air Valves** as per IS-14845 and MJP's standard specifications double orifice type combined with screw down isolating valve, small orifice elastic ball resting on a gun metal orifice nipple, large orifice vulcanite ball seating on moulded seat ring, inlet face and drilled, including insurance,third party inspection charges, loading, unloading,transportation upto departmental stores, excluding GST levied by GOI & GOM in all respect etc. complete			
a)	**Double Ball Flanged Type - PN -1 With small Orifice**			
i)	50 mm	No	**5467.00**	
ii)	65 mm	No	**6379.00**	
iii)	80 mm	No	**7286.00**	

Sr No	Item Description	Unit	Rate (in Rs.) 2019-2020	
b)	**Double Ball Flanged Type - PN -1.6 With small Orifice**			
i)	50 mm	No	**7242.00**	
ii)	65 mm	No	**8201.00**	
iii)	80 mm	No	**10148.00**	
7	**Providing and supplying Air Valves** as per IS-14845-2000 and MJP's standard specifications double orifice type combined with isolating sluice valve, mounted in horizontal position and operated by wheel gearing, small orifice elastic ball resting on a gun metal orifice nipple, large orifice vulcanite ball seating on moulded seat ring, inlet face and drilled, including insurance, third party inspection charges, loading, unloading,transportation upto departmental store, excluding GST levied by GOI & GOM in all respect etc. complete			
a)	**Double Ball Flanged Type - PN -1.0**			
i)	100 mm	No	**9214.00**	
ii)	150 mm	No	**16792.00**	
iii)	200 mm	No	**28239.00**	
b)	**Double Ball Flanged Type - PN -1.6**			
i)	100 mm	No	**14087.00**	
ii)	150 mm	No	**19845.00**	
iii)	200 mm	No	**33375.00**	
8	**Providing and supplying Kinetic Double Orifice type Air Valves** confirming to IS 14845 as per MJP's standard specifications combined with screw down isolating valve, small orifice elastic ball resting on a gun metal orifice nipple, large orifice vulcanite ball seating on moulded seat ring, inlet face and drilled,including insurance, third party inspection charges, loading, unloading, transportation upto departmental stores,excluding GST levied by GOI & GOM in all respect etc. complete.			
a)	**Kinetic Air Valve Flanged Type P-1**			
i)	40 mm	No	**8471.00**	
ii)	50 mm	No	**9576.00**	
iii)	80 mm	No	**11233.00**	
b)	**Kinetic Air Valve Flanged Type P-1.6**			
i)	40 mm	No	**10588.00**	
ii)	50 mm	No	**11969.00**	
iii)	80 mm	No	**14040.00**	

Sr No	Item Description	Unit	Rate (in Rs.) 2019-2020	
9	**Providing and supplying Kinetic Double Orifice type Air Valves** confirming to IS 14845 as per MJP's standard specifications having small orifice elastic ball resting on a gun metal orifice nipple, large orifice vulcanite ball seating on moulded seat ring,with built-in Kinetic features, isolating sluice valve mounted in horizontal position and operated by wheel gearing, inlet face and drilled, including insurance, third party inspection charges, loading, unloading, transportation upto departmental stores, excluding GST levied by GOI & GOM in all respect etc. complete.			
a)	**Kinetic Air Valve Flanged Type P-1**			
i)	100 mm	No	**12245.00**	
ii)	150 mm	No	**17126.00**	
iii)	200 mm	No	**26700.00**	
b)	**Kinetic Air Valve Flanged Type P-1.6**			
i)	100 mm	No	**15308.00**	
ii)	150 mm	No	**21406.00**	
iii)	200 mm	No	**33375.00**	
10	**Lowering, laying and fixing in proper alignment and position all types of C.I. air valves** as directed by Engineer-in-charge including cost of conveyance from stores to site of work, cost of all material and giving satisfactory hydraulic testing, etc. complete. (for all class of valves).			
a)	**Air Valve Single Ball (PN-1 and PN - 1.6)**			
i)	15 mm	No	**121.00**	
ii)	20 mm	No	**153.00**	
iii)	25 mm	No	**198.00**	
iv)	32 mm	No	**219.00**	
v)	40 mm	No	**234.00**	
vi)	50 mm	No	**254.00**	
vii)	65 mm	No	**267.00**	
viii)	80 mm	No	**279.00**	
ix)	100 mm	No	**312.00**	
x)	125 mm	No	**378.00**	
xi)	150 mm	No	**420.00**	
xii)	200 mm	No	**462.00**	
b)	**Air Valve Double Ball (PN-1 and PN - 1.6)**			
i)	15 mm	No	**132.00**	
ii)	20 mm	No	**164.00**	
iii)	25 mm	No	**198.00**	
iv)	32 mm	No	**224.00**	
v)	40 mm	No	**262.00**	
vi)	50 mm	No	**303.00**	
vii)	65 mm	No	**349.00**	
viii)	80 mm	No	**416.00**	
ix)	100 mm	No	**440.00**	
x)	125 mm	No	**484.00**	
xi)	150 mm	No	**662.00**	
xii)	200 mm	No	**728.00**	

Sr No	Item Description	Unit	Rate (in Rs.) 2019-2020	
c)	**Kinetic Air Valve (PN-1 and PN - 1.6)**			
i)	40 mm	No	**300.00**	
ii)	50 mm	No	**347.00**	
iii)	65 mm	No	**378.00**	
iv)	80 mm	No	**416.00**	
v)	100 mm	No	**458.00**	
vi)	125 mm	No	**499.00**	
vii)	150 mm	No	**716.00**	
viii)	200 mm	No	**780.00**	
11	**Providing erecting Cast Steel/ Spheroidal Graphite (S.G) Iron D/F Sluice Valves / Butterfly Valves** with jointing to pipe work (including all hardware and packing) water works quality, having non-rising spindle with hand wheel and without bypass arrangement, spindle of stainless steel as per requirement, inspection charges,transportation upto departmental store, unloading,stacking, excluding GST levied by GOI & GOM in all respect etc. excluding C. C. foundation / structural steel support.			
	For Rating Class 150 (Working Pressure 20 kg/cm2 and Test Pressure 30 kg/cm2)			
a)	**Sluice Valves.**			
i)	80 mm	No	**14124.00**	
ii)	100 mm	No	**18831.00**	
iii)	150 mm	No	**28247.00**	
iv)	200 mm	No	**44053.00**	
v)	250 mm	No	**63396.00**	
vi)	300 mm	No	**81115.00**	
vii)	350 mm	No	**108154.00**	
viii)	400 mm	No	**180478.00**	
ix)	450 mm	No	**246243.00**	
x)	500 mm	No	**289697.00**	
xi)	600 mm	No	**330736.00**	
b)	**Butterfly Valves.**			
i)	300 mm	No	**101999.00**	
ii)	350 mm	No	**108736.00**	
iii)	400 mm	No	**122134.00**	
iv)	450 mm	No	**130109.00**	
v)	500 mm	No	**150611.00**	
vi)	600 mm	No	**169496.00**	

Sr No	Item Description	Unit	Rate (in Rs.) 2019-2020	
12	**Providing erecting Cast Steel D/F Sluice Valves / Butterfly Valves** with jointing to pipe work (including all hardware and packing) water works quality having non-rising spindle with hand wheel and without bypass arrangement, spindle of stainless steel as per requirement, inspection charges,transportation upto departmental store, unloading, stacking,excluding GST levied by GOI & GOM in all respect etc. excluding C. C. foundation / structural steel support.			
	For Rating Class 300 (Working Pressure 52 kg/cm2 and Test Pressure 78 kg/cm2)			
a)	**Sluice Valves**			
i)	80 mm	No	**15203.00**	
ii)	100 mm	No	**24003.00**	
iii)	150 mm	No	**36596.00**	
iv)	200 mm	No	**57395.00**	
v)	250 mm	No	**61956.00**	
vi)	300 mm	No	**104445.00**	
vii)	350 mm	No	**176149.00**	
viii)	400 mm	No	**256971.00**	
ix)	450 mm	No	**309395.00**	
x)	500 mm	No	**482009.00**	
xi)	600 mm	No	**728543.00**	
b)	**Butterfly Valves**			
i)	300 mm	No	**124438.00**	
ii)	350 mm	No	**132659.00**	
iii)	400 mm	No	**149003.00**	
iv)	450 mm	No	**158733.00**	
v)	500 mm	No	**183747.00**	
vi)	600 mm	No	**206785.00**	
13	**Providing erecting Cast Steel /Spheroidal Graphite (S.G.) Iron D/F Reflux Valves** Single Door with jointing to pipe work (including all hardware and packing) water works quality with jointing to pipe without bypass arrangement,with gunmental seats including inspection charges,transportation upto departmental store,unloading,stacking excluding GST levied by GOI & GOM in all respect etc. completed but excluding C. C. foundation /structural steel support.			
	For Rating Class 150 (Working Pressure 20 kg/cm2 and Test Pressure 30 kg/cm2)			
i)	80 mm	No	**9856.00**	
ii)	100 mm	No	**15091.00**	
iii)	150 mm	No	**25566.00**	
iv)	200 mm	No	**48610.00**	
v)	250 mm	No	**84641.00**	
vi)	300 mm	No	**111510.00**	

Sr No	Item Description	Unit	Rate (in Rs.) 2019-2020	
14	**Providing erecting Cast Steel D/F Reflux Valves Single door** with jointing to pipe work (including all hardware and packing) water works quality with jointing to pipe without bypass arrangement, with gunmetal seat including inspection charges, transportation upto departmental store, unloading, stacking excluding GST levied by GOI & GOM in all respect etc. completed but excluding excluding C. C. foundation / structural steel support.			
	For Rating Class 300 (Working Pressure 52 kg/cm2 and Test Pressure 78 kg/cm2)			
i)	80 mm	No	**14684.00**	
ii)	100 mm	No	**20697.00**	
iii)	150 mm	No	**34419.00**	
iv)	200 mm	No	**60975.00**	
v)	250 mm	No	**110393.00**	
vi)	300 mm	No	**134411.00**	
15	**Providing, erecting Kinetic Double Orifice Cast Steel Air Valves** with an isolating Sluice Valve mounted in horizontal position operated by wheel gear suitable for working pressure of Class-150 rating **(20 kg/cm2)**			
i)	80 mm	No	**28474.00**	
ii)	100 mm	No	**39689.00**	
iii)	150 mm	No	**76053.00**	
iv)	200 mm	No	**98308.00**	
16	**Providing, erecting Kinetic Double Orifice Cast Steel Air Valves** with an isolating Sluice Valve mounted in horizontal position operated by wheel gear suitable for working pressure of Class 300 rating **(52 kg/cm2)**			
i)	80 mm	No	**34689.00**	
ii)	100 mm	No	**39653.00**	
iii)	150 mm	No	**92664.00**	
iv)	200 mm	No	**111855.00**	
17	**Providing and fixing in position air valve shaft** including providing and fixing GI Medium Class or 6 mm thick M.S. pipe shaft 2.70 M long over branch flange of air valve tee, providing PCC block of M-150 concrete, 150 mm thick around the air valve tee including encasing of vertical shaft in PCC M-150 as shown in type design together with providing and making flanged joints wherever required and fixing of air valve tee, etc.complete as per type design and as directed by Engineer -in- charge for following diameters of pipe lines (type design attached.)			
a)	**Foundation on Murum and Harder Strata.**			
i)	upto 150mm	No	**5071.00**	
ii)	200 to 400 mm	No	**5941.00**	
iii)	450 to 900mm	No	**12082.00**	
iv)	1000 to 1200 mm	No	**15172.00**	

Sr No	Item Description	Unit	Rate (in Rs.) 2019-2020	
b)	**Foundation in B. C. Soil or Any Other Soil.**			
i)	upto 150 mm	No	**6008.00**	
ii)	200 to 400 mm	No	**7247.00**	
iii)	450 to 900 mm	No	**13801.00**	
iv)	1000 to 1200 mm	No	**17307.00**	
18	Providing and supplying **C.I. D/F angle type spring loaded pressure relief valves** of approved make and quality including inspection charges, transportation to departmental stores excluding GST levied by GOI & GOM in all respect etc. complete.			
a)	**Type PN-1**			
i)	25 mm	No	**3974.00**	
ii)	40 mm	No	**5179.00**	
iii)	50 mm	No	**6707.00**	
iv)	80 mm	No	**10171.00**	
v)	100 mm	No	**14238.00**	
vi)	125 mm	No	**19414.00**	
vii)	150 mm	No	**22184.00**	
viii)	200 mm	No	**48987.00**	
ix)	250 mm	No	**68860.00**	
x)	300 mm	No	**90812.00**	
b)	**Type PN-1.6**			
i)	25 mm	No	**4968.00**	
ii)	40 mm	No	**6470.00**	
iii)	50 mm	No	**7334.00**	
iv)	80 mm	No	**11772.00**	
v)	100 mm	No	**16162.00**	
vi)	125 mm	No	**24261.00**	
vii)	150 mm	No	**27729.00**	
viii)	200 mm	No	**61230.00**	
ix)	250 mm	No	**86074.00**	
x)	300 mm	No	**113780.00**	
19	Lowering, laying and fixing in proper alignment and position all types of **C.I. D/F angle type spring loaded pressure relief valves** including cost of all material,labour, cost of conveyance from stores to site of work and giving satisfactory hydraulic testing, etc. complete. (For all class of valves.)			
i)	25 mm	No	**226.00**	
ii)	40 mm	No	**300.00**	
iii)	50 mm	No	**348.00**	
iv)	80 mm	No	**415.00**	
v)	100 mm	No	**455.00**	
vi)	125 mm	No	**507.00**	
vii)	150 mm	No	**716.00**	
viii)	200 mm	No	**781.00**	
ix)	250 mm	No	**912.00**	
x)	300 mm	No	**1041.00**	
	Note : Only 85% rate is payable till satisfactory hydraulic testing is given.			

Sr No	Item Description	Unit	Rate (in Rs.) 2019-2020	
20	**Cutting and champhering of pipes** of following diameters including cost of all materials and labour involved, etc.complete as directed by Engineer-in-charge (for all class of pipes).			
a)	**C.I.Pipes**			
i)	80 mm	1 cut	**41.00**	
ii)	100 mm	1 cut	**47.00**	
iii)	150 mm	1 cut	**73.00**	
iv)	200 mm	1 cut	**92.00**	
v)	250 mm	1 cut	**132.00**	
vi)	300 mm	1 cut	**156.00**	
vii)	350 mm	1 cut	**161.00**	
viii)	400 mm	1 cut	**204.00**	
ix)	450 mm	1 cut	**237.00**	
x)	500 mm	1 cut	**283.00**	
xi)	600 mm	1 cut	**345.00**	
xii)	700 mm	1 cut	**407.00**	
xiii)	750 mm	1 cut	**486.00**	
xiv)	800 mm	1 cut	**531.00**	
xv)	900 mm	1 cut	**584.00**	
xvi)	1000 mm	1 cut	**635.00**	
21	Providing and supplying I.S.I. mark **rubber gasket suitable for C.I. or D. I. pipe** of all class for tyton joints including inspection charges, transportation upto departmental stores excluding GST levied by GOI & GOM in all respect etc. complete.			
a)	**S.B.R. Gaskets for C. I. / D.I. Pipes**			
i)	80 mm	No	**39.00**	
ii)	100 mm	No	**43.00**	
III)	150 mm	No	**60.00**	
iv)	200 mm	No	**102.00**	
v)	250 mm	No	**132.00**	
vi)	300 mm	No	**186.00**	
vii)	350 mm	No	**213.00**	
viii)	400 mm	No	**296.00**	
ix)	450 mm	No	**323.00**	
x)	500 mm	No	**441.00**	
xi)	600 mm	No	**612.00**	
xii)	700 mm	No	**1089.00**	
xiii)	750 mm	No	**1132.00**	
xiv)	800 mm	No	**1173.00**	
xv)	900 mm	No	**1696.00**	
xvi)	1000 mm	No	**2179.00**	
b)	**Sealing 'O' Rings of SBR (for CID Joints)**			
i)	80 mm	set	**44.00**	
ii)	100 mm	set	**54.00**	
iii)	125 mm	set	**63.00**	
iv)	150 mm	set	**75.00**	

Sr No	Item Description	Unit	Rate (in Rs.) 2019-2020	
c)	**Flat Flanged Gaskets moulded out of SBR (ForFlanged Joints)**			
i)	80 mm	No	**82.00**	
ii)	100 mm	No	**108.00**	
iii)	125 mm	No	**128.00**	
iv)	150 mm	No	**176.00**	
v)	200 mm	No	**217.00**	
vi)	250 mm	No	**305.00**	
vii)	300 mm	No	**323.00**	
viii)	350 mm	No	**392.00**	
ix)	400 mm	No	**484.00**	
x)	450 mm	No	**529.00**	
xi)	500 mm	No	**620.00**	
xii)	600 mm	No	**834.00**	
	Providing Rubber Gasket -			
	EPDM Gaskets for C. I. / D.I. Pipes			
i)	80 mm.	No	**45.00**	
ii)	100 mm.	No	**47.00**	
iii)	150 mm.	No	**70.00**	
iv)	200 mm.	No	**117.00**	
v)	250 mm.	No	**160.00**	
vi)	300 mm.	No	**211.00**	
vii)	350 mm.	No	**246.00**	
viii)	400 mm.	No	**336.00**	
ix)	450 mm.	No	**376.00**	
x)	500 mm.	No	**498.00**	
xi)	600 mm.	No	**699.00**	
xii)	700 mm.	No	**1313.00**	
xiii)	750 mm.	No	**1376.00**	
xiv)	800 mm.	No	**1678.00**	
xv)	900 mm.	No	**2166.00**	
xvi)	1000 mm	No	**2517.00**	
22	Providing and fixing in position and jointing **high performance C. I. Air valves** for water combination type (Kinetic air valve along with automatic air valves) double ball, double orifice with stainless steel ball, **tamper proof air** vents rolling seal mechanism for air release and anti vacuum application designed for 16 Kg. Per sq. cm. working pressure and tested for 20 for kg per sq. cm. pressure. (Rate to include cost of gaskets, bolt, nut and any other material required for jointing and its transportation etc. excluding GST levied by GOI & GOM in all respect.			
i)	C. I. ARV FLFF PN 1.6 50mm Dia.	No	**8920.00**	
ii)	C. I. ARV FLFF PN 1.6 80mm Dia.	No	**12377.00**	
iii)	C. I. ARV FLFF PN 1.6 100mm Dia.	No	**19901.00**	
iv)	C. I. ARV FLFF PN 1.6 150mm Dia.	No	**33312.00**	
v)	C. I. ARV FLFF PN 1.6 200mm Dia.	No	**40351.00**	

Sr No	Item Description	Unit	Rate (in Rs.) 2019-2020	
23	Providing and supplying at site of **ductile iron /spheroidal graphite (S.G.) iron D/F double eccentric resilient seated short body butterfly valves** with gear box & handwheel, without bypass arrangement. Valves in accordance with BS EN 593 of PN 10/16 rated, with body & disc of ductile iron confirming to EN 1563/IS 1865 Gr.500/7 or Gr.400/15, Body seat of intergral SG Iron/S.S. AISI 316, seal retaining ring of steel C45/S.S. 1.4436,Shaft of S.S. 1.4021, Periferial disc seal and "O"rings of WRAS approved EPDM rubber (suitable for drinking water),Internal fasteners of stainless steel A2. Body & disc coated inside & outside with electrostatically applied epoxy powder coated blue colour. (suitable for drinking water.) as per DIN 30677- 2 & GSK guidelines with a coating thickness of min.250 microns. Valves should be 100% tight shutoff.Face to face is per IS 13095 short body. Flange drilling as per IS 1538 raised face & pressure testing at manufactures works shall be done as per IS 13095. including transportation charges excluding GST levied by GOI & GOM in all respect etc.complete.		**PN-10**	**PN-16**
	200 mm dia	No	**73085.00**	**88275**
	250 mm dia	No	**91533.00**	**114230**
	300 mm dia	No	**117497.00**	**150920**
	350 mm dia	No	**146297.00**	**178408**
	400 mm dia	No	**174371.00**	**203598**
	450 mm dia	No	**225938.00**	**275976**
	500 mm dia	No	**246472.00**	**330811**
	600 mm dia	No	**358824.00**	**505483**
	700 mm dia	No	**596783.00**	**696246**
	800 mm dia	No	**708679.00**	**851659**
	900 mm dia	No	**870307.00**	**1031935**
	1000 mm dia	No	**1230863.00**	**1325360**
24	Providing and supplying at site of **ductile iron / spheroidal graphite (S.G.) iron D/F non-rising spindle resilient seated glandless sluice valves** with handwheel & without bypass arrangement. Valves in accordance with BS 5163 of PN-10/ 16 rated, with body and bonnet of ductile iron confirming to IS 1865 Gr. 500/7 or Gr.400/15. Wedge fully encapsulated WRAS approved EPDM rubber (approved for drinking water), Wedge nutof brass,shaft of stainless steel1.4021/1.4104, stem seals min. 3 nos. of NBR, internal fasteners of stainless steel A2. Body & Bonnet coated inside & outside with electrostatically applied epoxy powder coated blue colour (suitable for drinking water) as per DIN 30677-2 & GSK guidelines with a coating thickness of min. 250 microns. Valves should be full bore & tight shut-off. Flange drilling as per IS 1538 raised face & pressure testing at manufactures works shall be done as per IS 14846. including transportation charges excluding GST levied by GOI & GOM in all respect etc. complete. (For PN 10 & 16)			

Sr No	Item Description	Unit	Rate (in Rs.) 2019-2020	
	Item No.24 Contd---			
	50 mm dia	No	**10251.00**	
	80 mm dia	No	**13017.00**	
	100 mm dia	No	**16127.00**	
	150 mm dia	No	**22495.00**	
	200 mm dia	No	**35702.00**	
	250 mm dia	No	**63251.00**	
	300 mm dia	No	**84787.00**	
	350 mm dia	No	**194052.00**	
	400 mm dia	No	**234160.00**	
	450 mm dia	No	**319957.00**	
	500 mm dia	No	**404064.00**	
	600 mm dia	No	**584595.00**	
25	Providing and supplying at site **ductile iron / Spheroidal Graphite (S.G.) iron single / Double chamber tamper proof air valve** without isolating sluice valve. Valves in accordance with BSEN 1074-4 of PN 10/16 rated,with body and bonnet of ductile iron confirming to EN 1563/IS 1865 Gr. 500/7 or Gr.400/15 floats, float guide,seat ring of stainless steel 1.4436/1.4306, seat ring gasket of WRAS approved EPDM rubber (suitable for drinking water), internal fasteners of stainless steel A2. Body & Bonnet coated inside & outside with electrostatically applied epoxy powder coated blue colour (suitable for drinking water) as per DIN 30677-2 & GSK guidelines with a coating thickness of min. 250 microns. Flange connections as per IS 1538 raised face & pressure testing at manufactures works shall be done as per IS 14845.including transportation charges excluding GST levied by GOI & GOM in all respect etc. complete. (For PN 10 & 16)			
	50 mm dia	No	**23168.00**	
	80 mm dia	No	**23774.00**	
	100 mm dia	No	**29245.00**	
	150 mm dia	No	**40674.00**	
	200 mm dia	No	**42308.00**	

Section - I- (XIII) - MECHANICAL JOINTS/FITTINGS			
Sr No	**Item Description**	**Unit**	**Rate (in Rs.) 2019-2020**
1	Supply of **C. I. Mechanical Compression Flanged / Socket Tailpiece** (Popularly known as I TM Flanged / Socket Tailpiece) suitable for making flanged connection with the plain barrel of C. I. Spun Pipes (as per - IS - 1536 /2001) and D. I. Pipes (as per IS: 8329 / 2000).The Tailpiec to be supplied complete with sealing rubber gasket of S.B.R, C.I. Follower Glands and M.S. Nut Bolts.The whole assembly should be mechanically and hydraulically tested to the provisions as laid down in IS:1538 /1993. The rates are inclusive of cost of material,freight charges, loading, transportation and unloading at departemental store, excluding GST levied by GoI and GoM in all respect, etc. complete as directed.		
1	80 mm	No	**1311.00**
2	100 mm	No	**1430.00**
3	125 mm	No	**1800.00**
4	150 mm	No	**2574.00**
5	200 mm	No	**3335.00**
6	250 mm	No	**5031.00**
7	300 mm	No	**5632.00**
8	350 mm	No	**7427.00**
9	400 mm	No	**9694.00**
10	450 mm	No	**11380.00**
11	500 mm	No	**14299.00**
12	600 mm	No	**18336.00**
13	700 mm	No	**25009.00**
14	750 mm	No	**30390.00**
2	Supply of **C. I. Mechanical Compression Collar Coupling** suitable for C. I. Spun Pipes (as per - IS - 1536 /2001) and complete with sealing rubber gasket of SBR,.C.I. follower Glands and M.S. nut Bolts.The whole assembly should be mechanically and hydraulically tested to the provisions as laid down in IS:1538 /1993.		
1	80 mm No	No	**826.00**
2	100 mm	No	**886.00**
3	125 mm	No	**1181.00**
4	150 mm	No	**1593.00**
5	200 mm	No	**1818.00**
6	250 mm	No	**2914.00**
7	300 mm	No	**3729.00**
8	350 mm	No	**4597.00**
9	400 mm	No	**7154.00**
10	450 mm	No	**8033.00**
11	500 mm	No	**10977.00**

Sr No	Item Description	Unit	Rate (in Rs.) 2019-2020
12	600 mm	No	**13692.00**
13	700 mm	No	**17889.00**
14	750 mm	No	**20990.00**
3	Supply of **C. I. Mechanical Joint Double Socket 90^0 (11/4'') Bends** as dimensionally described in Table-14 of IS-13382/1992 complete with sealing rubber gasket of SBR (dimensionally described in IS- 12820/1989) with cast iron follower gland and mild steel nut bolts coated or otherwise protected from rusting and suitable for C. I. pipes.		
1	80 mm	No	**2247.00**
2	100 mm	No	**2607.00**
3	125 mm	No	**3045.00**
4	150 mm	No	**4787.00**
5	200 mm	No	**6353.00**
6	250 mm	No	**9455.00**
7	300 mm	No	**11507.00**
8	350 mm	No	**19053.00**
9	400 mm	No	**25968.00**
10	450 mm	No	**33146.00**
11	500 mm	No	**41247.00**
12	600 mm	No	**58295.00**
13	700 mm	No	**92016.00**
14	750 mm	No	**104509.00**
4	Supply of **CI Mechanical joint Double Socket 45^0 (11/8'') Bends** as dimensionally described in Table -15 of IS - 13382/1992 complete with sealing rubber gasket of S.B.R. (dimensionally described in IS-12820/1989) with cast iron follower gland mild steel nut bolts coated or otherwise protected from rusting and suitable for C. I. pipes.		
1	80 mm	No	**2087.00**
2	100 mm	No	**2323.00**
3	125 mm	No	**2936.00**
4	150 mm	No	**4032.00**
5	200 mm	No	**5311.00**
6	250 mm	No	**7791.00**
7	300 mm	No	**9400.00**
8	350 mm	No	**15681.00**
9	400 mm	No	**19349.00**
10	450 mm	No	**26989.00**
11	500 mm	No	**30069.00**
12	600 mm	No	**41633.00**
13	700 mm	No	**59329.00**
14	750 mm	No	**78462.00**

Sr No	Item Description	Unit	Rate (in Rs.) 2019-2020
5	Supply of C**. I. Mechanical Joint Double Socket 22.5^0 (1/6'') Bends** as dimensionally described in Table -16 of IS-13382/ 1992 complete with sealing rubber gasket of SBR (dimensionally described in IS-12820/1989) with cast iron follower gland and mild steel nut bolts coated or otherwise protected from rusting and suitable for C. I. pipes.		
1	80 mm	No	**2003.00**
2	100 mm	No	**2230.00**
3	125 mm	No	**2677.00**
4	150 mm	No	**3785.00**
5	200 mm	No	**4747.00**
6	250 mm	No	**7179.00**
7	300 mm	No	**8664.00**
8	350 mm	No	**13677.00**
9	400 mm	No	**17534.00**
10	450 mm	No	**22182.00**
11	500 mm	No	**25851.00**
12	600 mm	No	**34252.00**
13	700 mm	No	**51524.00**
14	750 mm	No	**56739.00**
6	Supply of **CI Mechanical joint Double Socket 11.25^0 (1/32'') Bends** as dimensionally described in Table -17 of IS - 13382/ 1992 complete with sealing rubber gasket of S.B.R.(dimensionally described in IS-12820/1989) with cast iron follower gland and mild steel nut bolts coated or otherwise protected from rusting and suitable for C. I. pipes.		
1	80 mm	No	**1983.00**
2	100 mm	No	**2178.00**
3	125 mm	No	**2366.00**
4	150 mm	No	**3700.00**
5	200 mm	No	**4556.00**
6	250 mm	No	**6735.00**
7	300 mm	No	**7462.00**
8	350 mm	No	**11777.00**
9	400 mm	No	**15951.00**
10	450 mm	No	**20134.00**
11	500 mm	No	**21947.00**
12	600 mm	No	**30086.00**
13	700 mm	No	**40559.00**
14	750 mm	No	**45249.00**

Sr No	Item Description	Unit	Rate (in Rs.) 2019-2020
7	Supply of **CI Mechanical joint All Socket Tees** as dimensionally described in Table -18 of IS - 13382/1992 complete with sealing rubber gasket of S.B.R. (dimensionally described in IS- 12820/1989) with cast iron follower gland and mild steel nut bolts coated or otherwise protected from rusting and suitable for C. I.pipes.		
1	80x80x80 mm dia	No	**3039.00**
2	100x100x80 mm	No	**3267.00**
3	100x100x100 mm	No	**3622.00**
4	150x150x80 mm	No	**5074.00**
5	150x150x100 mm	No	**5146.00**
6	150x150x150 mm	No	**6382.00**
7	200x200x80 mm	No	**6120.00**
8	200x200x100 mm	No	**6188.00**
9	200x200x150 mm	No	**7370.00**
10	200x200x200 mm	No	**8109.00**
11	250x250x80 mm	No	**8619.00**
12	250x250x100 mm	No	**8809.00**
13	250x250x150 mm	No	**10513.00**
14	250x250x200 mm	No	**11108.00**
15	250x250x250 mm	No	**12459.00**
16	300x300x80 mm	No	**9451.00**
17	300x300x100 mm	No	**9664.00**
18	300x300x150 mm	No	**12393.00**
19	300x300x200 mm	No	**12803.00**
20	300x300x250 mm	No	**13555.00**
21	300x300x300 mm	No	**14960.00**
8	Supply of **CI Mechanical joint Double Socket with Flanged Tees** dimensionally described in Table -19 of IS - 13382/1992 complete with sealing rubber gasket of S.B.R.(dimensionally described in IS-12820/1989) with cast iron follower gland and mild steel nut bolts coated or galvanised coated or otherwise protected from rusting and suitable for C. I. pipes.		
1	80x80x80 mm dia	No	**2976.00**
2	100x100x80 mm	No	**3266.00**
3	100x100x100 mm	No	**3455.00**
4	150x150x80 mm	No	**4928.00**
5	150x150x100 mm	No	**5050.00**
6	150x150x150 mm	No	**6015.00**
7	200x200x80 mm	No	**5784.00**
8	200x200x100 mm	No	**6170.00**
9	200x200x150 mm	No	**7106.00**
10	200x200x200 mm	No	**8147.00**
11	250x250x80 mm	No	**8169.00**

Sr No	Item Description	Unit	Rate (in Rs.) 2019-2020
12	250x250x100 mm	No	**8597.00**
13	250x250x150 mm	No	**10200.00**
14	250x250x200 mm	No	**10673.00**
15	250x250x250 mm	No	**11052.00**
16	300x300x80 mm	No	**9590.00**
17	300x300x100 mm	No	**9778.00**
18	300x300x150 mm	No	**11289.00**
19	300x300x200 mm	No	**11385.00**
20	300x300x250 mm	No	**12564.00**
21	300x300x300 mm	No	**15398.00**
22	350x350x80 mm	No	**13413.00**
23	350x350x100 mm	No	**14265.00**
24	350x350x150 mm	No	**15348.00**
25	350x350x200 mm	No	**17885.00**
26	350x350x300 mm	No	**18323.00**
27	350x350x350 mm	No	**20968.00**
28	400x400x80 mm	No	**17534.00**
29	400x400x100 mm	No	**18587.00**
30	400x400x150 mm	No	**20694.00**
31	400x400x200 mm	No	**21111.00**
32	400x400x300 mm	No	**25442.00**
33	400x400x400 mm	No	**29130.00**
34	450x450x80 mm	No	**20913.00**
35	450x450x100 mm	No	**21969.00**
36	450x450x200 mm	No	**25764.00**
37	450x450x300 mm	No	**32511.00**
38	450x450x350 mm	No	**34304.00**
39	450x450x450 mm	No	**37261.00**
40	500x500x100 mm	No	**23529.00**
41	500x500x250 mm	No	**32175.00**
42	500x500x300 mm	No	**33333.00**
43	500x500x400 mm	No	**40191.00**
44	500x500x500 mm	No	**48523.00**
45	600x600x100 mm	No	**33626.00**
46	600x600x300 mm	No	**46175.00**
47	600x600x400 mm	No	**52605.00**
48	600x600x500 mm	No	**56927.00**
49	600x600x600 mm	No	**69896.00**
50	700x700x100 mm	No	**44565.00**
51	700x700x200 mm	No	**51630.00**
52	700x700x350 mm	No	**62385.00**
53	700x700x400 mm	No	**67024.00**
54	750x750x150 mm	No	**53153.00**
55	750x750x250 mm	No	**60958.00**
56	750x750x750 mm	No	**116950.00**

Sr No	Item Description	Unit	Rate (in Rs.) 2019-2020
9	Supply of **CI Mechaincal joint Double Socket Reducers** as described in Table -21 of IS -13382/1992 complete with sealing rubber gasket of SBR(dimensionally described in IS-12820/1989) with cast iron follower gland and mild steel nut bolts coated or otherwise protected from rusting and suitable for C. I. pipes.		
1	100x80 mm dia	No	**2108.00**
2	150x80 mm dia	No	**3317.00**
3	150x100 mm dia	No	**3511.00**
4	200x100 mm dia	No	**4041.00**
5	200x150 mm dia	No	**4420.00**
6	250x150 mm dia	No	**5891.00**
7	250x200 mm dia	No	**6038.00**
8	300x150 mm dia	No	**7427.00**
9	300x200 mm dia	No	**7439.00**
10	300x250 mm dia	No	**7566.00**
11	350x200 mm dia	No	**10692.00**
12	350x250 mm dia	No	**10726.00**
13	350x300 mm dia	No	**10600.00**
14	400x250 mm dia	No	**16149.00**
15	400x300 mm dia	No	**14307.00**
16	400x350 mm dia	No	**14402.00**
17	450x400 mm dia	No	**17884.00**
18	450x350 mm dia	No	**17874.00**
19	450x400 mm dia	No	**17650.00**
20	500x350 mm dia	No	**21500.00**
21	500x400 mm dia	No	**21172.00**
22	500x450 mm dia	No	**20636.00**
23	600x400 mm dia	No	**31217.00**
24	600x450 mm dia	No	**30382.00**
25	600x500 mm dia	No	**28526.00**
26	700x500 mm dia	No	**42851.00**
27	700x600 mm dia	No	**38889.00**
28	750x600 mm dia	No	**46189.00**
29	750x700 mm dia	No	**42694.00**
30	800x450mm dia	No	**63544.00**
31	800x700mm dia	No	**54549.00**

Section - I- (XIV) - M.S.PIPES

Sr No	Item Description	Unit	Rate (in Rs.) 2019-2020
1	Manufacturing, providing and supplying **spirally welded / ERW/ SAW / fabricated M. S. pipes** (Commercial Quality) including procurements of plates, gas cutting to requried size rolling, tack welding assembling in suitable lengths to form pipes, welding on automatic welding machine and forming 'V' edge on both ends of pipes including railway freight, insurance, unloading from railway wagon, loading into truck, transport to stores, unloading,stacking excluding GST levied by GOI & GOM in all respect, etc, complete as per IS - 3589 and IS-5504 as applicable as per specifications (No negative tolerance in thickness is permissible		
a)	**Dia. of pipe 219.10 mm (O.D)**		
	Thickness of pipe :		
i)	4.80 mm	Rmt	**1577.00**
ii)	5.60 mm	Rmt	**1832.00**
iii)	6.40 mm	Rmt	**2087.00**
iv)	7.00 mm	Rmt	**2275.00**
v)	7.90 mm	Rmt	**2557.00**
vi)	8.20 mm	Rmt	**2651.00**
vii)	8.70 mm	Rmt	**2806.00**
viii)	9.50 mm	Rmt	**3052.00**
b)	**Dia. of pipe 273.10 mm (O.D)**		
	Thickness of pipe :		
i)	4.80 mm	Rmt	**1974.00**
ii)	5.60 mm	Rmt	**2296.00**
iii)	6.40 mm	Rmt	**2616.00**
iv)	7.20 mm	Rmt	**2934.00**
v)	7.80 mm	Rmt	**3172.00**
vi)	8.70 mm	Rmt	**3526.00**
vii)	9.30 mm	Rmt	**3760.00**
c)	**Dia. of pipe 323.9 mm (O.D)**		
	Thickness of pipe :		
i)	5.60 mm	Rmt	**2732.00**
ii)	6.40 mm	Rmt	**3114.00**
iii)	7.10 mm	Rmt	**3446.00**
iv)	7.90 mm	Rmt	**3826.00**
v)	8.40 mm	Rmt	**4062.00**
vi)	8.70 mm	Rmt	**4202.00**
vii)	9.50 mm	Rmt	**4578.00**

Sr No	Item Description	Unit	Rate (in Rs.) 2019-2020
d)	**Dia. of pipe 355.7 mm (O.D)**		
	Thickness of pipe :		
i)	5.60 mm	Rmt	**3004.00**
ii)	6.40 mm	Rmt	**3426.00**
iii)	7.10 mm	Rmt	**3793.00**
iv)	7.90 mm	Rmt	**4210.00**
v)	8.70 mm	Rmt	**4625.00**
vi)	9.50 mm	Rmt	**5040.00**
e)	**Dia. of pipe 406.0 mm (O.D)**		
	Thickness of pipe :		
i)	5.60 mm	Rmt	**3436.00**
ii)	6.40 mm	Rmt	**3919.00**
iii)	7.10 mm	Rmt	**4340.00**
iv)	7.90 mm	Rmt	**4820.00**
v)	8.70 mm	Rmt	**5297.00**
vi)	9.50 mm	Rmt	**5773.00**
vii)	10.00 mm	Rmt	**6070.00**
f)	**Dia. of pipe 457.0 mm (O.D)**		
	Thickness of pipe :		
i)	5.60 mm	Rmt	**3875.00**
ii)	6.40 mm	Rmt	**4420.00**
iii)	7.10 mm	Rmt	**4896.00**
iv)	7.90 mm	Rmt	**5437.00**
v)	8.70 mm	Rmt	**5977.00**
vi)	9.50 mm	Rmt	**6516.00**
vii)	10.00 mm	Rmt	**6851.00**
g)	**Dia. of pipe 508.0 mm (O.D)**		
	Thickness of pipe :		
i)	5.60 mm	Rmt	**4313.00**
ii)	6.40 mm	Rmt	**4920.00**
iii)	7.10 mm	Rmt	**5450.00**
iv)	7.90 mm	Rmt	**6055.00**
v)	8.70 mm	Rmt	**6658.00**
vi)	9.50 mm	Rmt	**7259.00**
vii)	10.00 mm	Rmt	**7633.00**
h)	**Dia. of pipe 559.0 mm (O.D)**		
	Thickness of pipe :		
i)	5.60 mm	Rmt	**4750.00**
ii)	6.40 mm	Rmt	**5420.00**
iii)	7.10 mm	Rmt	**6006.00**
iv)	7.90 mm	Rmt	**6673.00**
v)	8.70 mm	Rmt	**7338.00**
vi)	9.50 mm	Rmt	**8002.00**
vii)	10.00 mm	Rmt	**8414.00**

Sr No	Item Description	Unit	Rate (in Rs.) 2019-2020
i)	**Dia. of pipe 610.0 mm (O.D)**		
	Thickness of pipe :		
i)	5.60 mm	Rmt	**5188.00**
ii)	6.40 mm	Rmt	**5921.00**
iii)	7.10 mm	Rmt	**6560.00**
iv)	7.90 mm	Rmt	**7290.00**
v)	8.70 mm	Rmt	**8017.00**
vi)	9.50 mm	Rmt	**8743.00**
vii)	10.00 mm	Rmt	**9196.00**
viii)	12.00 mm	Rmt	**10998.00**
j)	**Dia. of pipe 660.0 mm (O.D)**		
	Thickness of pipe :		
i)	5.60 mm	Rmt	**5617.00**
ii)	6.40 mm	Rmt	**6410.00**
iii)	7.10 mm	Rmt	**7105.00**
iv)	7.90 mm	Rmt	**7895.00**
v)	8.70 mm	Rmt	**8684.00**
vi)	9.50 mm	Rmt	**9472.00**
vii)	10.00 mm	Rmt	**9962.00**
k)	**Dia. of pipe 711.0 mm (O.D)**		
	Thickness of pipe :		
i)	5.60 mm	Rmt	**6054.00**
ii)	6.40 mm	Rmt	**6911.00**
iii)	7.10 mm	Rmt	**7660.00**
iv)	7.90 mm	Rmt	**8513.00**
v)	8.70 mm	Rmt	**9364.00**
vi)	9.50 mm	Rmt	**10214.00**
vii)	10.00 mm	Rmt	**10744.00**
viii)	12.00 mm	Rmt	**12856.00**
l)	**Dia. of pipe 762.00. mm (O. D.)**		
	Thickness of pipe :		
i)	5.60 mm	Rmt	**6492.00**
ii)	6.40 mm	Rmt	**7412.00**
iii)	7.10 mm	Rmt	**8215.00**
iv)	7.90 mm	Rmt	**9130.00**
v)	8.70 mm	Rmt	**10044.00**
vi)	9.50 mm	Rmt	**10957.00**
vii)	10.00 mm	Rmt	**11526.00**

Sr No	Item Description	Unit	Rate (in Rs.) 2019-2020
m)	**Dia. of pipe 813.00. mm (O.D.)**		
	Thickness of pipe :		
i)	5.60 mm	Rmt	**6930.00**
ii)	6.40 mm	Rmt	**7912.00**
iii)	7.10 mm	Rmt	**8770.00**
iv)	7.90 mm	Rmt	**9748.00**
v)	8.70 mm	Rmt	**10724.00**
vi)	9.50 mm	Rmt	**11699.00**
vii)	10.00 mm	Rmt	**12307.00**
viii)	12.00 mm	Rmt	**14731.00**
n)	**Dia. of pipe 864.00. mm (O. D.)**		
	Thickness of pipe :		
i)	5.60 mm	Rmt	**7367.00**
ii)	6.40 mm	Rmt	**8412.00**
iii)	7.10 mm	Rmt	**9325.00**
iv)	7.90 mm	Rmt	**10366.00**
v)	8.70 mm	Rmt	**11404.00**
vi)	9.50 mm	Rmt	**12440.00**
vii)	10.00 mm	Rmt	**13088.00**
o)	**Dia. of pipe 914.00 mm (O. D.)**		
	Thickness of pipe :		
i)	5.60 mm	Rmt	**7796.00**
ii)	6.40 mm	Rmt	**8902.00**
iii)	7.10 mm	Rmt	**9868.00**
iv)	7.90 mm	Rmt	**10970.00**
v)	8.70 mm	Rmt	**12071.00**
vi)	9.50 mm	Rmt	**13170.00**
vii)	10.00 mm	Rmt	**13854.00**
p)	**Dia. of pipe 965.00 mm (O. D.)**		
	Thickness of pipe :		
i)	5.60 mm	Rmt	**8233.00**
ii)	6.40 mm	Rmt	**9403.00**
iii)	7.10 mm	Rmt	**10423.00**
iv)	7.90 mm	Rmt	**11468.00**
v)	8.70 mm	Rmt	**12751.00**
vi)	9.50 mm	Rmt	**13912.00**
vii)	10.00 mm	Rmt	**14636.00**

Sr No	Item Description	Unit	Rate (in Rs.) 2019-2020
q)	**Dia. of pipe 1016.00 mm (O. D.)**		
	Thickness of pipe :		
i)	5.60 mm	Rmt	**8731.00**
ii)	6.40 mm	Rmt	**9904.00**
iii)	7.10 mm	Rmt	**10978.00**
iv)	7.90 mm	Rmt	**12206.00**
v)	8.70 mm	Rmt	**13432.00**
vi)	9.50 mm	Rmt	**14654.00**
vii)	10.00 mm	Rmt	**15418.00**
viii)	12.00 mm	Rmt	**18466.00**
r)	**Dia. of pipe 1067.00 mm (O. D.)**		
	Thickness of pipe :		
i)	5.60 mm	Rmt	**9110.00**
ii)	6.40 mm	Rmt	**10403.00**
iii)	7.10 mm	Rmt	**11533.00**
iv)	7.90 mm	Rmt	**12823.00**
v)	8.70 mm	Rmt	**14111.00**
vi)	9.50 mm	Rmt	**15396.00**
vii)	10.00 mm	Rmt	**16199.00**
s)	**Dia. of pipe 1118.00. mm (O. D.)**		
	Thickness of pipe :		
i)	5.60 mm	Rmt	**9547.00**
ii)	6.40 mm	Rmt	**10903.00**
iii)	7.10 mm	Rmt	**12088.00**
iv)	7.90 mm	Rmt	**13441.00**
v)	8.70 mm	Rmt	**14791.00**
vi)	9.50 mm	Rmt	**16139.00**
vii)	10.00 mm	Rmt	**16981.00**
t)	**Dia. of pipe 1168.00. mm (O. D.)**		
	Thickness of pipe :		
i)	5.60 mm	Rmt	**9977.00**
ii)	6.40 mm	Rmt	**11394.00**
iii)	7.10 mm	Rmt	**12632.00**
iv)	7.90 mm	Rmt	**14046.00**
v)	8.70 mm	Rmt	**15458.00**
vi)	9.50 mm	Rmt	**16867.00**
vii)	10.00 mm	Rmt	**17748.00**

Sr No	Item Description	Unit	Rate (in Rs.) 2019-2020
u)	**Dia. of pipe 1219.00. mm (O. D.)**		
	Thickness of pipe :		
i)	6.40 mm	Rmt	**11894.00**
ii)	7.10 mm	Rmt	**13187.00**
iii)	7.90 mm	Rmt	**14663.00**
iv)	8.70 mm	Rmt	**16138.00**
v)	9.50 mm	Rmt	**17610.00**
vi)	10.00 mm	Rmt	**18529.00**
vii)	12.00 mm	Rmt	**22198.00**
v)	**Dia. of pipe 1296.00. mm (O. D.)**		
	Thickness of pipe :		
i)	9.50 mm	Rmt	**18731.00**
ii)	9.98 mm	Rmt	**19669.00**
iii)	10.00 mm	Rmt	**19710.00**
w)	**Dia. of pipe 1321.00. mm (O. D.)**		
	Thickness of pipe :		
i)	6.40 mm	Rmt	**12894.00**
ii)	7.10 mm	Rmt	**14297.00**
iii)	7.90 mm	Rmt	**15899.00**
iv)	8.70 mm	Rmt	**17498.00**
v)	9.50 mm	Rmt	**19094.00**
vi)	10.00 mm	Rmt	**20093.00**
x)	**Dia. of pipe 1422.00. mm (O. D.)**		
	Thickness of pipe :		
i)	7.10 mm	Rmt	**15396.00**
ii)	7.90 mm	Rmt	**17122.00**
iii)	8.70 mm	Rmt	**18845.00**
iv)	9.50 mm	Rmt	**20566.00**
v)	10.00 mm	Rmt	**21641.00**
vi)	12.00 mm	Rmt	**25932.00**
y)	**Dia. of pipe 1473.00. mm (O. D.)**		
	Thickness of pipe :		
i)	9.50 mm	Rmt	**21308.00**
ii)	9.98 mm	Rmt	**22378.00**
z)	**Dia. of pipe 1524.00. mm (O. D.)**		
	Thickness of pipe :		
i)	7.10 mm	Rmt	**16506.00**
ii)	7.90 mm	Rmt	**18356.00**
iii)	8.70 mm	Rmt	**20204.00**
iv)	9.50 mm	Rmt	**22051.00**
v)	10.00 mm	Rmt	**23204.00**
vi)	11.90 mm	Rmt	**27577.00**
vii)	12.00 mm	Rmt	**27808.00**

Sr No	Item Description	Unit	Rate (in Rs.) 2019-2020
aa)	**Dia. of pipe 1550.00. mm (O. D.)**		
	Thickness of pipe :		
i)	10.00 mm	Rmt	**23602.00**
ii)	11.00 mm	Rmt	**25945.00**
ab)	**Dia. of pipe 1576.00. mm (O. D.)**		
	Thickness of pipe :		
i)	9.50 mm	Rmt	**22808.00**
ii)	10.00 mm	Rmt	**24001.00**
ac)	**Dia. of pipe 1626.00. mm (O. D.)**		
	Thickness of pipe :		
i)	7.10 mm	Rmt	**17616.00**
ii)	7.90 mm	Rmt	**19592.00**
iii)	8.70 mm	Rmt	**21565.00**
iv)	9.50 mm	Rmt	**23536.00**
v)	10.00 mm	Rmt	**24767.00**
vi)	12.00 mm	Rmt	**29684.00**
ad)	**Dia. of pipe 1650.00. mm (O. D.)**		
	Thickness of pipe :		
i)	7.90 mm	Rmt	**19883.00**
ii)	8.70 mm	Rmt	**21884.00**
iii)	9.50 mm	Rmt	**23885.00**
iv)	10.00 mm	Rmt	**25134.00**
v)	12.00 mm	Rmt	**30125.00**
ae)	**Dia. of pipe 1700.00. mm (O. D.)**		
	Thickness of pipe :		
i)	7.90 mm	Rmt	**20486.00**
ii)	8.70 mm	Rmt	**22550.00**
iii)	9.50 mm	Rmt	**24613.00**
iv)	10.00 mm	Rmt	**25901.00**
v)	12.00 mm	Rmt	**31044.00**
af)	**Dia. of pipe 1750.00. mm (O. D.)**		
	Thickness of pipe :		
i)	7.90 mm	Rmt	**21092.00**
ii)	8.70 mm	Rmt	**23218.00**
iii)	9.50 mm	Rmt	**25342.00**
iv)	10.00 mm	Rmt	**26668.00**
v)	12.00 mm	Rmt	**31964.00**

Sr No	Item Description	Unit	Rate (in Rs.) 2019-2020
ag)	**Dia. of pipe 1800.00. mm (O. D.)**		
	Thickness of pipe :		
i)	7.90 mm	Rmt	**21698.00**
ii)	8.70 mm	Rmt	**23885.00**
iii)	9.50 mm	Rmt	**26070.00**
iv)	10.00 mm	Rmt	**27433.00**
v)	12.00 mm	Rmt	**32884.00**
ah	**Dia. of pipe 1850.00. mm (O. D.)**		
	Thickness of pipe :		
i)	7.90 mm	Rmt	
ii)	8.70 mm	Rmt	**24551.00**
iii)	9.50 mm	Rmt	**26797.00**
iv)	10.00 mm	Rmt	**28200.00**
v)	12.00 mm	Rmt	**33803.00**
ai)	**Dia. of pipe 1900.00. mm (O. D.)**		
	Thickness of pipe :		
i)	7.90 mm	Rmt	**22909.00**
ii)	8.70 mm	Rmt	**25218.00**
iii)	9.50 mm	Rmt	**27526.00**
iv)	10.00 mm	Rmt	**28967.00**
v)	12.00 mm	Rmt	**34723.00**
aj)	**Dia. of pipe 1950.00. mm (O. D.)**		
	Thickness of pipe :		
i)	7.90 mm	Rmt	**23514.00**
ii)	8.70 mm	Rmt	**25884.00**
iii)	9.50 mm	Rmt	**28253.00**
iv)	10.00 mm	Rmt	**29732.00**
v)	12.00 mm	Rmt	**35642.00**
ak)	**Dia. of pipe 2000.00. mm (O. D.)**		
	Thickness of pipe :		
i)	7.90 mm	Rmt	**24120.00**
ii)	8.70 mm	Rmt	**26551.00**
iii)	9.50 mm	Rmt	**28981.00**
iv)	10.00 mm	Rmt	**30499.00**
v)	12.00 mm	Rmt	**36563.00**
al)	**Dia. of pipe 2050.00. mm (O. D.)**		
	Thickness of pipe :		
i)	7.90 mm	Rmt	**24725.00**
ii)	8.70 mm	Rmt	**27218.00**
iii)	9.50 mm	Rmt	**29708.00**
iv)	10.00 mm	Rmt	**31265.00**
v)	12.00 mm	Rmt	**37482.00**

Sr No	Item Description	Unit	Rate (in Rs.) 2019-2020
am)	**Dia. of pipe 2100.00. mm (O. D.)**		
	Thickness of pipe :		
i)	7.90 mm	Rmt	**25331.00**
ii)	8.70 mm	Rmt	**27884.00**
iii)	9.50 mm	Rmt	**30762.00**
iv)	10.00 mm	Rmt	**32032.00**
v)	12.00 mm	Rmt	**38401.00**
an)	**Dia. of pipe 2150.00. mm (O. D.)**		
	Thickness of pipe :		
i)	7.90 mm	Rmt	**25937.00**
ii)	8.70 mm	Rmt	**28552.00**
iii)	9.50 mm	Rmt	**31165.00**
iv)	10.00 mm	Rmt	**32798.00**
v)	12.00 mm	Rmt	**39320.00**
ao)	**Dia. of pipe 2200.00. mm (O. D.)**		
	Thickness of pipe :		
i)	7.90 mm	Rmt	**26540.00**
ii)	8.70 mm	Rmt	**29218.00**
iii)	9.50 mm	Rmt	**31894.00**
iv)	10.00 mm	Rmt	**33564.00**
v)	12.00 mm	Rmt	**40241.00**
ap)	**Dia. of pipe 2250.00. mm (O. D.)**		
	Thickness of pipe :		
i)	7.90 mm	Rmt	**27146.00**
ii)	8.70 mm	Rmt	**29885.00**
iii)	9.50 mm	Rmt	**32621.00**
iv)	10.00 mm	Rmt	**34331.00**
v)	12.00 mm	Rmt	**41160.00**
aq)	**Dia. of pipe 2300.00. mm (O. D.)**		
	Thickness of pipe :		
i)	7.90 mm	Rmt	**27752.00**
ii)	8.70 mm	Rmt	**30552.00**
iii)	9.50 mm	Rmt	**33349.00**
iv)	10.00 mm	Rmt	**35096.00**
v)	12.00 mm	Rmt	**42079.00**
ar)	**Dia. of pipe 2350.00. mm (O. D.)**		
	Thickness of pipe :		
i)	7.90 mm	Rmt	**28357.00**
ii)	8.70 mm	Rmt	**31218.00**
iii)	9.50 mm	Rmt	**34076.00**
iv)	10.00 mm	Rmt	**35863.00**
v)	12.00 mm	Rmt	**42998.00**

Sr No	Item Description	Unit	Rate (in Rs.) 2019-2020
as)	**Dia. of pipe 2400.00. mm (O. D.)**		
	Thickness of pipe :		
i)	7.90 mm	Rmt	**28963.00**
ii)	8.70 mm	Rmt	**31885.00**
iii)	9.50 mm	Rmt	**34805.00**
iv)	10.00 mm	Rmt	**36630.00**
v)	12.00 mm	Rmt	**43919.00**
at)	**Dia. of pipe 2450.00. mm (O. D.)**		
	Thickness of pipe :		
i)	7.90 mm	Rmt	**29568.00**
ii)	8.70 mm	Rmt	**32551.00**
iii)	9.50 mm	Rmt	**35534.00**
iv)	10.00 mm	Rmt	**37396.00**
v)	12.00 mm	Rmt	**44838.00**
au)	**Dia. of pipe 2500.00. mm (O. D.)**		
	Thickness of pipe :		
i)	7.90 mm	Rmt	**30173.00**
ii)	8.70 mm	Rmt	**33218.00**
iii)	9.50 mm	Rmt	**36262.00**
iv)	10.00 mm	Rmt	**38162.00**
v)	12.00 mm	Rmt	**45757.00**
vi)	16.00 mm	Rmt	**60913.00**
2	Manufacturing, providing and supplying **spirally welded / ERW/ SAW / fabricated M. S. pipes** (Commercial Quality) including procurements of plates, gas cutting to required size rolling, tack welding assembling in suitable lengths to form pipes, welding on automatic welding machine and forming 'V' edge on both ends of pipes including railway freight, insurance, unloading from railway wagon, loading into truck, transport to stores, unloading, stacking, excluding GST levied by GOI & GOM in all respect etc. complete as per IS - 3589 and IS-5504 as applicable as per specifications (No negative tolerance in thickness is permissible).		
a)	**Dia. of pipe 200.00 mm (I. D.)**		
	Thickness of pipe :		
i)	5.00 mm	Rmt	**1571.00**
ii)	6.00 mm	Rmt	**1894.00**
iii)	7.00 mm	Rmt	**2221.00**
iv)	8.00 mm	Rmt	**2550.00**
v)	9.00 mm	Rmt	**2882.00**
vi)	10.00 mm	Rmt	**3218.00**

Sr No	Item Description	Unit	Rate (in Rs.) 2019-2020
b)	**Dia. of pipe 250.00 mm (I. D.)**		
	Thickness of pipe :		
i)	5.00 mm	Rmt	**1955.00**
ii)	6.00 mm	Rmt	**2354.00**
iii)	7.00 mm	Rmt	**2758.00**
iv)	8.00 mm	Rmt	**3163.00**
v)	9.00 mm	Rmt	**3574.00**
vi)	10.00 mm	Rmt	**3985.00**
c)	**Dia. of pipe 300.00 mm (I. D.)**		
	Thickness of pipe :		
i)	5.00 mm	Rmt	**2336.00**
ii)	6.00 mm	Rmt	**2814.00**
iii)	7.00 mm	Rmt	**3293.00**
iv)	8.00 mm	Rmt	**3776.00**
v)	9.00 mm	Rmt	**4262.00**
vi)	10.00 mm	Rmt	**4752.00**
d)	**Dia. of pipe 350.00 mm (I. D.)**		
	Thickness of pipe :		
i)	5.00 mm	Rmt	**2720.00**
ii)	6.00 mm	Rmt	**3274.00**
iii)	7.00 mm	Rmt	**3830.00**
iv)	8.00 mm	Rmt	**4390.00**
v)	9.00 mm	Rmt	**4952.00**
vi)	10.00 mm	Rmt	**5518.00**
e)	**Dia. of pipe 400.00 mm (I. D.)**		
	Thickness of pipe :		
i)	5.00 mm	Rmt	**3103.00**
ii)	6.00 mm	Rmt	**3733.00**
iii)	7.00 mm	Rmt	**4367.00**
iv)	8.00 mm	Rmt	**5002.00**
v)	9.00 mm	Rmt	**5642.00**
vi)	10.00 mm	Rmt	**6284.00**
f)	**Dia. of pipe 450.00 mm (I. D.)**		
	Thickness of pipe :		
i)	5.00 mm	Rmt	**3487.00**
ii)	6.00 mm	Rmt	**4193.00**
iii)	7.00 mm	Rmt	**4903.00**
iv)	8.00 mm	Rmt	**5616.00**
v)	9.00 mm	Rmt	**6331.00**
vi)	10.00 mm	Rmt	**7050.00**

Sr No	Item Description	Unit	Rate (in Rs.) 2019-2020
g)	**Dia. of pipe 500.00 mm (I. D.)**		
	Thickness of pipe :		
i)	5.00 mm	Rmt	**3870.00**
ii)	6.00 mm	Rmt	**4654.00**
iii)	7.00 mm	Rmt	**5438.00**
iv)	8.00 mm	Rmt	**6229.00**
v)	9.00 mm	Rmt	**7021.00**
vi)	10.00 mm	Rmt	**7817.00**
h)	**Dia. of pipe 550.00 mm (I. D.)**		
	Thickness of pipe :		
i)	5.00 mm	Rmt	**4253.00**
ii)	6.00 mm	Rmt	**5113.00**
iii)	7.00 mm	Rmt	**5976.00**
iv)	8.00 mm	Rmt	**6841.00**
v)	9.00 mm	Rmt	**7711.00**
vi)	10.00 mm	Rmt	**8582.00**
i)	**Dia. of pipe 600.00 mm (I. D.)**		
	Thickness of pipe :		
i)	5.00 mm	Rmt	**4636.00**
ii)	6.00 mm	Rmt	**5572.00**
iii)	7.00 mm	Rmt	**6512.00**
iv)	8.00 mm	Rmt	**7454.00**
v)	9.00 mm	Rmt	**8400.00**
vi)	10.00 mm	Rmt	**9348.00**
vii)	12.00 mm	Rmt	**11255.00**
j)	**Dia. of pipe 650.00 mm (I. D.)**		
	Thickness of pipe :		
i)	5.00 mm	Rmt	**5020.00**
ii)	6.00 mm	Rmt	**6032.00**
iii)	7.00 mm	Rmt	**7048.00**
iv)	8.00 mm	Rmt	**8068.00**
v)	9.00 mm	Rmt	**9090.00**
vi)	10.00 mm	Rmt	**10115.00**
vii)	12.00 mm	Rmt	**12175.00**
k)	**Dia. of pipe 700.00 mm (I. D.)**		
	Thickness of pipe :		
i)	5.00 mm	Rmt	**5402.00**
ii)	6.00 mm	Rmt	**6492.00**
iii)	7.00 mm	Rmt	**7585.00**
iv)	8.00 mm	Rmt	**8681.00**
v)	9.00 mm	Rmt	**9779.00**
vi)	10.00 mm	Rmt	**10882.00**
vii)	12.00 mm	Rmt	**13096.00**

Sr No	Item Description	Unit	Rate (in Rs.) 2019-2020
l)	**Dia. of pipe 750.00 mm (I. D.)**		
	Thickness of pipe :		
i)	5.00 mm	Rmt	**5786.00**
ii)	6.00 mm	Rmt	**6952.00**
iii)	7.00 mm	Rmt	**8122.00**
iv)	8.00 mm	Rmt	**9294.00**
v)	9.00 mm	Rmt	**10469.00**
vi)	10.00 mm	Rmt	**11647.00**
vii)	12.00 mm	Rmt	**14014.00**
m)	**Dia. of pipe 800.00 mm (I. D.)**		
	Thickness of pipe :		
i)	5.00 mm	Rmt	**6168.00**
ii)	6.00 mm	Rmt	**7412.00**
iii)	7.00 mm	Rmt	**8658.00**
iv)	8.00 mm	Rmt	**9907.00**
v)	9.00 mm	Rmt	**11159.00**
vi)	10.00 mm	Rmt	**12414.00**
vii)	12.00 mm	Rmt	**14934.00**
n)	**Dia. of pipe 850.00 mm (I. D.)**		
	Thickness of pipe :		
i)	5.00 mm	Rmt	**6552.00**
ii)	6.00 mm	Rmt	**7871.00**
iii)	7.00 mm	Rmt	**9193.00**
iv)	8.00 mm	Rmt	**10519.00**
v)	9.00 mm	Rmt	**11848.00**
vi)	10.00 mm	Rmt	**13180.00**
vii)	12.00 mm	Rmt	**15853.00**
o)	**Dia. of pipe 900.00 mm (I. D.)**		
	Thickness of pipe :		
i)	5.00 mm	Rmt	**6935.00**
ii)	6.00 mm	Rmt	**8332.00**
iii)	7.00 mm	Rmt	**9731.00**
iv)	8.00 mm	Rmt	**11132.00**
v)	9.00 mm	Rmt	**12538.00**
vi)	10.00 mm	Rmt	**13946.00**
vii)	12.00 mm	Rmt	**16774.00**
p)	**Dia. of pipe 950.00 mm (I. D.)**		
	Thickness of pipe :		
i)	5.00 mm	Rmt	**7319.00**
ii)	6.00 mm	Rmt	**8791.00**
iii)	7.00 mm	Rmt	**10267.00**
iv)	8.00 mm	Rmt	**11746.00**
v)	9.00 mm	Rmt	**13229.00**
vi)	10.00 mm	Rmt	**14713.00**
vii)	12.00 mm	Rmt	**17692.00**

Sr No	Item Description	Unit	Rate (in Rs.) 2019-2020
q)	**Dia. of pipe 1000.00 mm (I. D.)**		
	Thickness of pipe :		
i)	5.00 mm	Rmt	**7702.00**
ii)	6.00 mm	Rmt	**9251.00**
iii)	7.00 mm	Rmt	**10804.00**
iv)	8.00 mm	Rmt	**12360.00**
v)	9.00 mm	Rmt	**13918.00**
vi)	10.00 mm	Rmt	**15479.00**
vii)	12.00 mm	Rmt	**18612.00**
r)	**Dia. of pipe 1050.00 mm (I. D.)**		
	Thickness of pipe :		
i)	5.00 mm	Rmt	**8084.00**
ii)	6.00 mm	Rmt	**9710.00**
iii)	7.00 mm	Rmt	**11339.00**
iv)	8.00 mm	Rmt	**12972.00**
v)	9.00 mm	Rmt	**14608.00**
vi)	10.00 mm	Rmt	**16246.00**
vii)	12.00 mm	Rmt	**19531.00**
s)	**Dia. of pipe 1100.00 mm (I. D.)**		
	Thickness of pipe :		
i)	5.00 mm	Rmt	**8467.00**
ii)	6.00 mm	Rmt	**10170.00**
iii)	7.00 mm	Rmt	**11876.00**
iv)	8.00 mm	Rmt	**13585.00**
v)	9.00 mm	Rmt	**15298.00**
vi)	10.00 mm	Rmt	**17011.00**
vii)	12.00 mm	Rmt	**20452.00**
t)	**Dia. of pipe 1150.00 mm (I. D.)**		
	Thickness of pipe :		
i)	5.00 mm	Rmt	**8851.00**
ii)	6.00 mm	Rmt	**10631.00**
iii)	7.00 mm	Rmt	**12413.00**
iv)	8.00 mm	Rmt	**14198.00**
v)	9.00 mm	Rmt	**15986.00**
vi)	10.00 mm	Rmt	**17778.00**
vii)	12.00 mm	Rmt	**21371.00**

Sr No	Item Description	Unit	Rate (in Rs.) 2019-2020
u)	**Dia. of pipe 1200.00 mm (I. D.)**		
	Thickness of pipe :		
i)	5.00 mm	Rmt	**9234.00**
ii)	6.00 mm	Rmt	**11090.00**
iii)	7.00 mm	Rmt	**12949.00**
iv)	8.00 mm	Rmt	**14810.00**
v)	9.00 mm	Rmt	**16676.00**
vi)	10.00 mm	Rmt	**18545.00**
vii)	12.00 mm	Rmt	**22290.00**
v)	**Dia. of pipe 1250.00 mm (I. D.)**		
	Thickness of pipe :		
i)	6.00 mm	Rmt	**11550.00**
ii)	7.00 mm	Rmt	**13486.00**
iii)	8.00 mm	Rmt	**15425.00**
iv)	9.00 mm	Rmt	**17366.00**
v)	10.00 mm	Rmt	**19310.00**
vi)	12.00 mm	Rmt	**23210.00**
w)	**Dia. of pipe 1300.00 mm (I. D.)**		
	Thickness of pipe :		
i)	6.00 mm	Rmt	**12010.00**
ii)	7.00 mm	Rmt	**14022.00**
iii)	8.00 mm	Rmt	**16038.00**
iv)	9.00 mm	Rmt	**18055.00**
v)	10.00 mm	Rmt	**20077.00**
vi)	12.00 mm	Rmt	**24130.00**
x)	**Dia. of pipe 1350.00 mm (I. D.)**		
	Thickness of pipe :		
i)	7.00 mm	Rmt	**14558.00**
ii)	8.00 mm	Rmt	**16650.00**
iii)	9.00 mm	Rmt	**18745.00**
iv)	10.00 mm	Rmt	**20844.00**
v)	12.00 mm	Rmt	**25050.00**
y)	**Dia. of pipe 1400.00 mm (I. D.)**		
	Thickness of pipe :		
i)	7.00 mm	Rmt	**15094.00**
ii)	8.00 mm	Rmt	**17263.00**
iii)	9.00 mm	Rmt	**19435.00**
iv)	10.00 mm	Rmt	**21610.00**
v)	12.00 mm	Rmt	**25968.00**

Sr No	Item Description	Unit	Rate (in Rs.) 2019-2020
z)	**Dia. of pipe 1450.00 mm (I. D.)**		
	Thickness of pipe :		
i)	7.00 mm	Rmt	**15631.00**
ii)	8.00 mm	Rmt	**17876.00**
iii)	9.00 mm	Rmt	**20124.00**
iv)	10.00 mm	Rmt	**22376.00**
v)	12.00 mm	Rmt	**26888.00**
aa)	**Dia. of pipe 1500.00 mm (I. D.)**		
	Thickness of pipe :		
i)	7.00 mm	Rmt	**16168.00**
ii)	8.00 mm	Rmt	**18488.00**
iii)	9.00 mm	Rmt	**20814.00**
iv)	10.00 mm	Rmt	**23142.00**
v)	12.00 mm	Rmt	**27808.00**
ab)	**Dia. of pipe 1550.00 mm (I. D.)**		
	Thickness of pipe :		
i)	7.00 mm	Rmt	**16704.00**
ii)	8.00 mm	Rmt	**19103.00**
iii)	9.00 mm	Rmt	**21504.00**
iv)	10.00 mm	Rmt	**23909.00**
v)	12.00 mm	Rmt	**28728.00**
ac)	**Dia. of pipe 1600.00 mm (I. D.)**		
	Thickness of pipe :		
i)	7.00 mm	Rmt	**17240.00**
ii)	8.00 mm	Rmt	**19716.00**
iii)	9.00 mm	Rmt	**22194.00**
iv)	10.00 mm	Rmt	**24676.00**
v)	12.00 mm	Rmt	**29646.00**
ad)	**Dia. of pipe 1650.00 mm (I. D.)**		
	Thickness of pipe :		
i)	8.00 mm	Rmt	**20329.00**
ii)	9.00 mm	Rmt	**22884.00**
iii)	10.00 mm	Rmt	**25441.00**
iv)	12.00 mm	Rmt	**30566.00**
ae)	**Dia. of pipe 1700.00 mm (I. D.)**		
	Thickness of pipe :		
i)	8.00 mm	Rmt	**20941.00**
ii)	9.00 mm	Rmt	**23574.00**
iii)	10.00 mm	Rmt	**26208.00**
iv)	12.00 mm	Rmt	**31486.00**

Sr No	Item Description	Unit	Rate (in Rs.) 2019-2020
af)	**Dia. of pipe 1750.00 mm (I. D.)**		
	Thickness of pipe :		
i)	8.00 mm	Rmt	**21554.00**
ii)	9.00 mm	Rmt	**24263.00**
iii)	10.00 mm	Rmt	**26974.00**
iv)	12.00 mm	Rmt	**32406.00**
ag)	**Dia. of pipe 1800.00 mm (I. D.)**		
	Thickness of pipe :		
i)	8.00 mm	Rmt	**22168.00**
ii)	9.00 mm	Rmt	**24953.00**
iii)	10.00 mm	Rmt	**27740.00**
iv)	12.00 mm	Rmt	**33325.00**
ah)	**Dia. of pipe 1850.00 mm (I. D.)**		
	Thickness of pipe :		
i)	8.00 mm	Rmt	**22781.00**
ii)	9.00 mm	Rmt	**25643.00**
iii)	10.00 mm	Rmt	**28507.00**
iv)	12.00 mm	Rmt	**34244.00**
ai)	**Dia. of pipe 1900.00 mm (I. D.)**		
	Thickness of pipe :		
i)	8.00 mm	Rmt	**23394.00**
ii)	9.00 mm	Rmt	**26332.00**
iii)	10.00 mm	Rmt	**29273.00**
iv)	12.00 mm	Rmt	**35165.00**
aj)	**Dia. of pipe 1950.00 mm (I. D.)**		
	Thickness of pipe :		
i)	8.00 mm	Rmt	**24007.00**
ii)	9.00 mm	Rmt	**27022.00**
iii)	10.00 mm	Rmt	**30040.00**
iv)	12.00 mm	Rmt	**36084.00**
ak)	**Dia. of pipe 2000.00 mm (I. D.)**		
	Thickness of pipe :		
i)	8.00 mm	Rmt	**24619.00**
ii)	9.00 mm	Rmt	**27712.00**
iii)	10.00 mm	Rmt	**30806.00**
iv)	12.00 mm	Rmt	**37004.00**
v)	16.00 mm	Rmt	**49436.00**

Sr No	Item Description	Unit	Rate (in Rs.) 2019-2020
al)	**Dia. of pipe 2050.00 mm (I. D.)**		
	Thickness of pipe :		
i)	8.00 mm	Rmt	**25232.00**
ii)	9.00 mm	Rmt	**28400.00**
iii)	10.00 mm	Rmt	**31572.00**
iv)	12.00 mm	Rmt	**37922.00**
v)	16.00 mm	Rmt	**50663.00**
am)	**Dia. of pipe 2100.00 mm (I. D.)**		
	Thickness of pipe :		
i)	8.00 mm	Rmt	**25847.00**
ii)	9.00 mm	Rmt	**29090.00**
iii)	10.00 mm	Rmt	**32339.00**
iv)	12.00 mm	Rmt	**38843.00**
v)	16.00 mm	Rmt	**51888.00**
an)	**Dia. of pipe 2150.00 mm (I. D.)**		
	Thickness of pipe :		
i)	8.00 mm	Rmt	**26459.00**
ii)	9.00 mm	Rmt	**29779.00**
iii)	10.00 mm	Rmt	**33104.00**
iv)	12.00 mm	Rmt	**39762.00**
v)	16.00 mm	Rmt	**53114.00**
ao)	**Dia. of pipe 2200.00 mm (I. D.)**		
	Thickness of pipe :		
i)	8.00 mm	Rmt	**27072.00**
ii)	9.00 mm	Rmt	**30469.00**
iii)	10.00 mm	Rmt	**33871.00**
iv)	12.00 mm	Rmt	**40682.00**
v)	16.00 mm	Rmt	**54341.00**
ap)	**Dia. of pipe 2250.00 mm (I. D.)**		
	Thickness of pipe :		
i)	8.00 mm	Rmt	**27685.00**
ii)	9.00 mm	Rmt	**31160.00**
iii)	10.00 mm	Rmt	**34638.00**
iv)	12.00 mm	Rmt	**41600.00**
v)	16.00 mm	Rmt	**55566.00**
aq)	**Dia. of pipe 2300.00 mm (I. D.)**		
	Thickness of pipe :		
i)	8.00 mm	Rmt	**28298.00**
ii)	9.00 mm	Rmt	**31849.00**
iii)	10.00 mm	Rmt	**35404.00**
iv)	12.00 mm	Rmt	**42521.00**
v)	16.00 mm	Rmt	**56792.00**

Sr No	Item Description	Unit	Rate (in Rs.) 2019-2020
ar)	**Dia. of pipe 2350.00 mm (I. D.)**		
	Thickness of pipe :		
i)	8.00 mm	Rmt	**28910.00**
ii)	9.00 mm	Rmt	**32539.00**
iii)	10.00 mm	Rmt	**36170.00**
iv)	12.00 mm	Rmt	**43440.00**
v)	16.00 mm	Rmt	**58019.00**
as)	**Dia. of pipe 2400.00 mm (I. D.)**		
	Thickness of pipe :		
i)	8.00 mm	Rmt	**29525.00**
ii)	9.00 mm	Rmt	**33229.00**
iii)	10.00 mm	Rmt	**36936.00**
iv)	12.00 mm	Rmt	**44360.00**
v)	16.00 mm	Rmt	**59244.00**
at)	**Dia. of pipe 2450.00 mm (I. D.)**		
	Thickness of pipe :		
i)	8.00 mm	Rmt	**30138.00**
ii)	9.00 mm	Rmt	**33918.00**
iii)	10.00 mm	Rmt	**37702.00**
iv)	12.00 mm	Rmt	**45278.00**
v)	16.00 mm	Rmt	**60472.00**
au)	**Dia. of pipe 2500.00 mm (I. D.)**		
	Thickness of pipe :		
i)	8.00 mm	Rmt	**30750.00**
ii)	9.00 mm	Rmt	**34608.00**
iii)	10.00 mm	Rmt	**38468.00**
iv)	12.00 mm	Rmt	**46199.00**
v)	16.00 mm	Rmt	**61697.00**

Section - I- (XV) - FABRICATION OF M.S.PIPES & SPECIALS

Sr No	Item Description	Unit	Rate (in Rs.) 2019-2020
1	Providing, fabricating and fixing **expansion joints** for pipelines as per the drawing. The rate to include machining the strakes and steel ring as shown in the drawing and welding on either automatic welding machine or manually, Rate includes plates and flats required for expansion joint and all other materials such as synthetic rubber, rubber ring, etc. including packing as per specifications, grease, bolts and nuts, local handling,excluding GST levied by GOI & GOM in all respect etc.complete.		
	Expansion joints suitable for pipe diameters.		
i)	300mm. dia.	Each	**28832.00**
ii)	400 mm. dia.	Each	**41608.00**
iii)	450 mm. dia.	Each	**54122.00**
iv)	500 mm. Dia	Each	**72563.00**
v)	600 mm. dia.	Each	**85246.00**
vi)	700 mm. dia.	Each	**106120.00**
vii)	750 mm. dia.	Each	**116944.00**
viii)	800 mm. dia.	Each	**136096.00**
ix)	900 mm. dia.	Each	**158016.00**
x)	1000 mm. dia.	Each	**189208.00**
xi)	1200mm. dia.	Each	**251290.00**
2	**Blast cleaning** the surface of the old or new pipeline **internally** to remove all rust etc. complete, including providing sand, machinery, labour, cutting of pipes at required places and rewelding the same etc,complete as directed by Engineer-in-charge. (Pipes pieces if required for rewelding of old pipeline shall be paid separately.)	Sqm	**124.00**
3	**Blast Cleaning** of old or new pipeline surface internally **with mechanical cleaning machine** having steel scraper blades with required passes including removing all rust, scaling etc. including cutting of pipes at required places, rewelding the same including cost of all materials and labour,etc, complete (Pipes pieces if required for rewelding of old pipeline shall be paid separately.)	Sqm	**124.00**

Sr No	Item Description	Unit	Rate (in Rs.) 2019-2020
4	**Blast Cleaning of old pipeline surface internally** by using swabbing method by passing polyurethane foam "Pig" with required hydraulic pressure, cutting of pipes atrequired places, rewelding the same including cost of all materials and labour, etc.complete. (Pipe pieces if required for rewelding of old pipeline shall be paid separately.)		
	Note:- Water for this purpose shall be supplied by the department free of cost at fixed point within 5 km lead and all arrangements for filling section and creating hydraulic pressure on polyrethene pig shall be done by contractor at his own cost.	Sqm	**146.00**
5	**Blast cleaning** the surface of the old or new pipeline externally to remove all rust including providing sand machinery etc.complete as directed by Engineer-in-charge.	Sqm	**134.00**
6	Providing and applying **primer and one coat of red oxide** of iron paint internally to blast cleaned surface of the pipes.	Sqm	**40.00**
7	Providing and applying **primer and one coat of red oxide** of iron paint internally including cleaning the surface of the pipes with steel scrappers, wire brushes, and metal cleaning solution, etc.	Sqm	**67.00**
8	Providing and applying **primer and one coat of red oxide** of iron paint externally to blast cleaned surface of the pipes.	Sqm	**44.00**
9	Providing and applying **primer and one coat of red oxide** of iron paint externally including cleaning the surface of the pipes with steel scrappers, wire brushes, and metal cleaning solution,etc.	Sqm	**96.00**
10	Providing and applying covering coat of **grey graphite of approved** quality including dusting the surface etc. complete	Sqm	**49.00**
11	Providing and applying **one coat of zinc rich epoxy primer** to the internal surface of pipe line at site.	Sqm	**104.00**
12	Providing and applying **primer first coat of intertol 49 W emaline 05/58 pipe coat** or any other equivalent approved paint to the internal surface of pipe line at site.		
	a) First coat	Sqm	**80.00**
	b) Second coat	Sqm	**65.00**
	c)Third coat	Sqm	**64.00**

Sr No	Item Description	Unit	Rate (in Rs.) 2019-2020
13	**External Coating** Providing & applying 100% solids Polyurethane Coating meeting BIS 16719 or Rigid , Directto Metal , 100% Solids Polyurethane Coating meeting AWWA C-222 of minimum 1000 micron thickness on the external surface of MS pipe after blast cleaning to SA 2% with Anchor Profile of >75 Micron using angular Steel Grit.Pipe blast cleaning and coating shall only be permitted in the pipe manufacturer's facility , preferably on rolling conveyor using fast set materials.The rates are including loading , unloading , handling & transportation of pipeetc. complete.	Sqm	**662.00**
14	**Internal Lining** Providing & applying 100% solids Polyurethane Coating meeting BIS 16719 or Rigid , Directto Metal , 100% Solids Polyurethane Coating meeting AWWA C-222 & satisfying the criteio for drinking water as perWRAS-BS-6920 to a thickness of 500 micron (SSPC PA2) on the internal surface of MS pipe after blast cleaning to SA 2 1/2% with Anchor Profile of >75 Micron using angular Steel Grit. The coating should meet Total Organic Carbon (TOC) as per APHA-AWWAWEF 5310 C <2.00 milligram/liter.Pipe lining shall only be permitted in the pipe manufacturer's facility.Site application shall not be permitted .The rates are including loading , unloading , handling & transportation of pipeetc. complete.	Sqm	**470.00**
15	**Internal Lining(Food Grade Epoxy)** Providing & applying two part of food grade polyamide solvent less epoxy lining , meeting BIS 16676 on the internal surface of MS pipe after blast cleaning to SA 2 1/2% with Anchor Profile of >75 Micron using angular Steel Grit. The minimum dry film thickness (DFT) of internal lining shall be 400 micron (SSPC PA2) .The epoxy coating should offer highest resistance to cathodic disbondment and provide execellent adhsion to steel.The manufacturer shall have the certificate issued in support of portable water service for tests of pH , turbidity , total hardness , chloride nitrate , Iron , arsenic & fluride as per IS 10500:2003 and IS 16676:2017.Site application shall not be permitted .The rates are including loading , unloading , handling & transportation of pipe etc. complete.	Sqm	**415.00**
	Product shall be supplied and applied as per detailed specification provided by the deparment.		

Section - I- (XVI) - M.S.PIPES LAYING

Sr No	Item Description	Unit	Rate (in Rs.) 2019-2020
1	**Lowering, laying** in position to correct line and level including **M. S. pipes** with / without any outcoating on pedestals or chairs upon prepared formation. The rate to include loading, unloading, hoisting, marginal cutting wherever required, assembling and tack welding, and transportation upto 500 M. etc.completed as specified.		
	5 mm to 8 mmthick.		
i)	Upto 250 mm. dia.	Rmt	**413.00**
ii)	Above 250 mm.Upto 500 mm. dia.	Rmt	**486.00**
iii)	Above 500 mm.Upto 750 mm. dia.	Rmt	**557.00**
iv)	Above 750 mm.Upto 1000 mm. dia	Rmt	**631.00**
v)	Above 1000 mm.Upto 1250 mm. dia.	Rmt	**705.00**
	8 mm to 12 mm thick.		
i)	From 750 mm. Upto1000 mm. dia.	Rmt	**840.00**
ii)	Above 1000 mm.Upto l250 mm. dia	Rmt	**936.00**
iii)	Above 1250 mm.Upto 1500 mm. Dia	Rmt	**1033.00**
iv)	Above 1500 mmUpto 1750 mm. dia	Rmt	**1132.00**
v)	Above 1750 mm.Upto 2000 mm dia	Rmt	**1229.00**
vi)	Above 2000 mm.upto 2250 mm dia	Rmt	**1326.00**
vii)	Above 2250 mm.upto 2500 mm dia	Rmt	**1427.00**
	12 mm to 16 mm thick.		
i)	From 2000 mm Upto2250 mm dia	Rmt	**1264.00**
ii)	Above 2250 rnm.Uplo 2500 mm dia.	Rmt	**1364.00**
iii)	Above 2500 mmUpto 2750 mm dia	Rmt	**1456.00**
iv)	Above 2750 mm.Upto 3000 mm. dia.	Rmt	**1550.00**
v)	Above 3000 mm.upto 3250 mm dia.	Rmt	**1643.00**
vi)	Above 3250 mm.Upto 3500 mm dia	Rmt	**1739.00**
	16 mm to 20 mm thick.		
i)	From 2500 mm Upto 2750 mm dia	Rmt	**1910.00**
ii)	Above 2750 mmUpto 3000 mm dia	Rmt	**2016.00**
iii)	Above 3000 mmupto 3250 mm dia	Rmt	**2123.00**
iv)	Above 3250 mmUpto 3500 mm did	Rmt	**2226.00**
v)	Above 3500 mmUpto 3750 mm dia	Rmt	**2334.00**
vi)	Above 3750 mmupto 4000 mm dia	Rmt	**2441.00**
	20 mm to 25 mm thick.		
i)	Above 3500 mmUpto 3750 mm dia	Rmt	**2603.00**
ii)	Above 3750 mmupto 4000 mm dia	Rmt	**2751.00**

Sr No	Item Description	Unit	Rate (in Rs.) 2019-2020
2	**Lowering, laying** in position to correct line and level including **M.S. specials** with / without any outcoating such as distance pieces,straps, bends, tapers, etc. on pedestals or chairs upon formation.The rate to include loading, unloading, hoisting, marginal cutting wherever required, assembling and tack welding, and transportation upto 500M etc. complete.		
a)	**5 mm to 8 mm thick.**		
i)	Upto 250 mm. dia.	Rmt	**576.00**
ii)	Above 250 mm.Upto 500 mm. dia.	Rmt	**677.00**
iii)	Above 500 mm.Upto 750 mm. dia.	Rmt	**782.00**
iv)	Above 750 mm.Upto 1000 mm. dia.	Rmt	**882.00**
v)	Above 1000 mm.Upto 1250 mm. dia.	Rmt	**986.00**
	8 mm to 12 mm thick.		
i)	From 750 mm.Upto1000 mm. dia.	Rmt	**1176.00**
ii)	Above 1000 mm.Upto 1250 mm. dia.	Rmt	**1312.00**
iii)	Above 1250 mm.Upto 1500 mm. dia.	Rmt	**1447.00**
iv)	Above 1500 mm.Upto 1750 mm. dia.	Rmt	**1583.00**
v)	Above 1750 mm.Upto 2000 mm. dia.	Rmt	**1723.00**
vi)	Above 2000 mm.Upto 2250 mm. dia.	Rmt	**1856.00**
vii)	Above 2250 mm.Upto 2500 mm. dia.	Rmt	**1993.00**
	12 mm to 16 mm thick.		
i)	From 2000 mm.Upto 2250 mm. dia.	Rmt	**1833.00**
ii)	Above 2250 mm.Upto 2500 mm. dia.	Rmt	**1907.00**
iii)	Above 2500 mm.Upto 2750 mm. dia.	Rmt	**2041.00**
iv)	Above 2750 mm.Upto 3000 mm. dia.	Rmt	**2170.00**
v)	Above 3000 mm.Upto 3250 mm. dia.	Rmt	**2305.00**
vi)	Above 3250 mm.Upto 3500 mm. dia.	Rmt	**2434.00**
	16 mm to 20 mm thick.		
i)	From 2500 mm.Upto 2750 mm. dia.	Rmt	**2629.00**
ii)	Above 2750 mm.Upto 3000 mm. dia.	Rmt	**2747.00**
iii)	Above 3000 mm.Upto 3250 mm. dia.	Rmt	**2972.00**
iv)	Above 3250 mm.Upto 3500 mm. dia.	Rmt	**3120.00**
v)	Above 3500 mm.Upto 3750 mm. dia.	Rmt	**3266.00**
vi)	Above 3750 mm.Upto 4000 mm. dia.	Rmt	**3416.00**
	Above 20 mm to upto 25mm thick.		
i)	From 3500 mmUpto 3750 mm. dia.	Rmt	**3640.00**
ii)	Above 3750 mm.Upto 4000 mm. dia.	Rmt	**3850.00**

Sr No	Item Description	Unit	Rate (in Rs.) 2019-2020
3	**Lowering, laying** in position to correct line and level including **M. S. pipes** with / without any outcoating, **on pedestals or chairs upon piers, trestles** etc. The rate to include loading, unloading, hoisting,marginal cutting wherever required, assembling and tack welding,transportation upto 500 m. etc. complete.		
a)	**5 mm to 8 mm thick.**		
i)	Upto 250 mm. dia.	Rmt	**494.00**
ii)	Above 250 mm.Upto 500 mm. dia.	Rmt	**580.00**
iii)	Above 500 mm.Upto 750 mm. dia.	Rmt	**669.00**
iv)	Above 750 mm. Upto1000 mm. dia.	Rmt	**757.00**
v)	Above 1000 mm.Upto 1250 mm. dia.	Rmt	**846.00**
b)	**8 mm to 12 mm thick.**		
i)	From 750 mm.Upto1 000 mm. dia.	Rmt	**1008.00**
ii)	Above 1000 mm.Upto 1250 mm. dia.	Rmt	**1123.00**
iii)	Above 1250 mm.Upto 1500 mm. dia.	Rmt	**1241.00**
iv)	Above 1500 mm.Upto 1750 mm. dia.	Rmt	**1357.00**
v)	Above 1750 mm.Upto 2000 mm. dia.	Rmt	**1476.00**
vi)	Above 2000 mm.Upto 2250 mm. dia.	Rmt	**1592.00**
vii)	Above 2250 mm.Upto 2500 mm. dia.	Rmt	**1707.00**
c)	**12 mm to 16 mm thick.**		
	From 2000 mm.Upto 2250 mm. dia.	Rmt	**1454.00**
	Above 2250 mm.Upto 2500 mm. dia.	Rmt	**1525.00**
	Above 2500 mm.Upto 2750 mm. dia.	Rmt	**1748.00**
	Above 2750 mm.Upto 3000 mm. dia.	Rmt	**1862.00**
	Above 3000 mm.Upto 3250 mm. dia.	Rmt	**1977.00**
	Above 3250 mm.Upto 3500 mm. dia.	Rmt	**2072.00**
d)	**16 mm to 20 mm thick.**		
	Above 2500 mm.Upto 2750 mm. dia.	Rmt	**2291.00**
	Above 2750 mm.Upto 3000 mm. dia.	Rmt	**2420.00**
	Above 3000 mm.Upto 3250 mm. dia.	Rmt	**2545.00**
	Above 3250 mm.Upto 3500 mm. dia.	Rmt	**2672.00**
	Above 3500 mm.Upto 3750 mm. dia.	Rmt	**2800.00**
	Above 3750 mm.Upto 4000 mm. dia.	Rmt	**2928.00**
e)	**20 mm to 25 mm thick.**		
	from 3500 mm. Upto3750 mm. dia.	Rmt	**3121.00**
	Above 3750 mm.Upto 4000 mm. dia.	Rmt	**3301.00**
4	**Lowering and laying** in position to correct line and level including **M. S. specials such as distance pieces, straps, bends,tapers, etc. on pedestals or chairs upon piers or trestles**. The rate to include loading,unloading, hoisting, marginal cutting wherever required, assembling and tack welding, and including transportation upto 500 m. etc. complete as specified.		

Sr No	Item Description	Unit	Rate (in Rs.) 2019-2020
a)	**5 mm to 8 mm thick.**		
	Upto 250 mm. dia.	Rmt	**691.00**
	Above 250 mm.Upto 500 mm. dia.	Rmt	**814.00**
	Above 500 mm.Upto 750 mm. dia.	Rmt	**935.00**
	Above 750 mm.Upto 1000 mm. dia.	Rmt	**1060.00**
	Above 1000 mm.Upto 1250 mm. dia.	Rmt	**1179.00**
b)	**8 mm to 12 mm thick.**		
	From 750 mm.Upto1000 mm. dia.	Rmt	**1411.00**
	Above 1000 mm.Upto 1250 mm. dia.	Rmt	**1575.00**
	Above 1250 mm.Upto 1500 mm. dia.	Rmt	**1738.00**
	Above 1500 mm.Upto 1750 mm. dia.	Rmt	**1901.00**
	Above 1750 mm.Upto 2000 mm. dia.	Rmt	**2066.00**
	Above 2000 mm.Upto 2250 mm. dia.	Rmt	**2231.00**
	Above 2250 mm.Upto 2500 mm. dia.	Rmt	**2394.00**
c)	**12 mm to 16 mm thick.**		
	From 2000 mm.Upto 2250 mm. dia.	Rmt	**2199.00**
	Above 2250 mm.Upto 2500 mm. dia.	Rmt	**2287.00**
	Above 2500 mm.Upto 2750 mm. dia.	Rmt	**2448.00**
	Above 2750 mm.Upto 3 000 mm. dia.	Rmt	**2606.00**
	Above 3000 mm.Upto 3250 mm. dia.	Rmt	**2762.00**
	Above 3250 mm.Upto 3500 mm. dia.	Rmt	**2924.00**
d)	**16 mm to 20 mm thick.**		
	From 2500 mm.Upto 2750 mm. dia.	Rmt	**3212.00**
	Above 275Omm.Upto 3000 mm. dia.	Rmt	**3387.00**
	Above 3000 mm.Upto 3250 mm. dia.	Rmt	**3566.00**
	Above 3250 mm.Upto 3500 mm. dia.	Rmt	**3739.00**
	Above 3500 mm.Upto 3750 mm. dia.	Rmt	**3919.00**
	Above 3750 mm.Upto 4000 mm. dia.	Rmt	**4100.00**
e)	**20 mm to 25 mm thick.**		
	From 3500 mm.Upto 3750 mm. dia.	Rmt	**4371.00**
	Above 3750 mm.Upto 4000 mm. dia.	Rmt	**4619.00**
5	**Transporting** within 500 meters,laying in position to correct line and level **M. S. pipes** with / without any outcoating, on prepared bedding in trenches including marginal cutting wherever required, assembling tack welding the same. The rate to include loading, unloading, hoisting, etc. complete as specified.		
a)	**5 mm to 8 mm thick**		
	Upto 250 mm. dia.	Rmt	**421.00**
	Above 250 mm.Upto 500 mm. dia.	Rmt	**498.00**
	Above 500 mm.Upto 750 mm. dia.	Rmt	**573.00**
	Above 750 mm.Upto 1000 mm. dia.	Rmt	**647.00**
	Above 1000 mm.Upto 1250 mm. dia.	Rmt	**723.00**
b)	**8 mm to 12 mm thick**		

Sr No	Item Description	Unit	Rate (in Rs.) 2019-2020
	From 750 mm.Upto1000 mm. dia.	Rmt	**861.00**
	Above 1000 mm.Upto 1250 mm. dia.	Rmt	**960.00**
	Above 1250 mm.Upto 1500 mm. dia.	Rmt	**1060.00**
	Above 1500 mm.Upto 1750 mm. dia.	Rmt	**1162.00**
	Above 1750 mm.Upto 2000 mm. dia.	Rmt	**1258.00**
	Above 2000 mm.Upto 2250 mm. dia.	Rmt	**1357.00**
	Above 2250 mm.Upto 2500 mm. dia.	Rmt	**1456.00**
c)	**12 mm to 16 mm thick**		
	From 2000 mm.Upto 2250 mm. dia.	Rmt	**1340.00**
	Above 2250 mm.Upto 2500 mm. dia.	Rmt	**1398.00**
	Above 2500 mm.Upto 2750 mm. dia.	Rmt	**1494.00**
	Above 2750 mm.Upto 3000 mm. dia.	Rmt	**1590.00**
	Above 3000 mm.Upto 3250 mm. dia.	Rmt	**2941.00**
	Above 3250 mm.Upto 3500 mm. dia.	Rmt	**1784.00**
d)	**16 mm to 20 mm thick**		
	From 2500 mm.Upto 2750 mm. dia.	Rmt	**1953.00**
	Above 2750 mm.Upto 3000 mm. dia.	Rmt	**2059.00**
	Above 3000 mm.Upto 3250 mm. dia.	Rmt	**2170.00**
	Above 3250 mm.Upto 3500 mm. dia.	Rmt	**2280.00**
	Above 3500 mrn.Upto 3750 mm. dia.	Rmt	**1970.00**
	Above 3750 mm.Upto 4000 mm. dia.	Rmt	**2498.00**
e)	**20 mm to 25 mm thick**		
	From 3500 mm.Upto 3750 mm. dia.	Rmt	**2659.00**
	Above 3750 mm.Upto 4000 mm. dia.	Rmt	**2813.00**
6	**Transporting** within 500 meters,laying in position to correct line and level **M. S. specials pipes with / without any outcoating, such as distance pieces, straps, bends, tapers,** etc. on prepared bedding in trenches including marginal cutting wherever required, assembling tack welding, the same. The rate to include loading, unloading, hoisting, etc. complete as specified.		
a)	**5 mm to 8 mm thick**		
	Upto 250 mm. dia.	Rmt	**594.00**
	Above 250 mm.Upto 500 mm.dia.	Rmt	**695.00**
	Above 500 mm.Upto 750 mm. dia.	Rmt	**801.00**
	Above 750 mm.Upto 1000 mm. dia.	Rmt	**904.00**
	Above 1000 mm.Upto 1250 mm. dia.	Rmt	**1012.00**
b)	**8 mm to 12 mm thick**		
	From 750 mm.Upto1000 mm. dia.	Rmt	**1206.00**
	Above 1000 mm.Upto 1250 mm. dia.	Rmt	**1345.00**
	Above 1250 mm.Upto 1500 mm. dia.	Rmt	**1483.00**
	Above 1500 mm.Upto 1750 mm. dia.	Rmt	**1623.00**
	Above 1750 mm.Upto 2000 mm. dia.	Rmt	**1885.00**
	Above 2000 mm.Upto 2250 mm. dia.	Rmt	**1968.00**

Sr No	Item Description	Unit	Rate (in Rs.) 2019-2020
	Above 2250 mm.Upto 2500 mm. dia.	Rmt	**2041.00**
c)	**12 mm to 16 mm thick**		
	From 2000 mm.Upto 2250 mm. dia.	Rmt	**1876.00**
	Above 2250 mm.Upto 2500 mm. dia.	Rmt	**2030.00**
	Above 2500 mm.Upto 2750 mm. dia.	Rmt	**2089.00**
	Above 2750 mm.Upto 3000 mm. dia.	Rmt	**2225.00**
	Above 3000 mm.Upto 3250 mm. dia.	Rmt	**2365.00**
	Above 3250 mm.Upto 3500 mm. dia.	Rmt	**2498.00**
d)	**16 mm to 20 mm thick**		
	From 2500 mm.Upto 2750 mm. dia.	Rmt	**2714.00**
	Above 2750 mm.Upto 3000 mm. dia.	Rmt	**2886.00**
	Above 3000 mm.Upto 3250 mm. dia.	Rmt	**3039.00**
	Above 3250 mm.Upto 3500 mm. dia.	Rmt	**3192.00**
	Above 3500 mm.Upto 3750 mm. dia.	Rmt	**3344.00**
	Above 3750 mm.Upto 4000 mm. dia.	Rmt	**3499.00**
e)	**20 mm to 25 mm thick**		
	From 3500 mm.Upto 3750 mm. dia.	Rmt	**3721.00**
	Above 3750 mm.Upto 4000 mm. dia.	Rmt	**3939.00**
7	**Welding in all positions** with required number of runs, for M. S.pipes internally and / or externally including gauging wherever necessary,fixing appurtenances and other accessories in connection with pipe laying work as per specification.		
a)	**Butt Joints : Plate Thickness**		
	4 mm.	Rmt	**191.00**
	5 mm.	Rmt	**289.00**
	6 mm.	Rmt	**681.00**
	7 mm.	Rmt	**759.00**
	8 mm.	Rmt	**954.00**
	10mm.	Rmt	**1168.00**
	12mm.	Rmt	**1251.00**
	14mm.	Rmt	**1489.00**
	16mm.	Rmt	**1804.00**
	18mm.	Rmt	**1953.00**
	20 mm.	Rmt	**2340.00**
	22 mm.	Rmt	**2937.00**
	25 mm.	Rmt	**3986.00**
b)	**Lap joints with convex fillet welds Lap Lengths**		
	Lengths:		
	5 mm.	Rmt	**268.00**
	6 mm.	Rmt	**343.00**
	8 mm.	Rmt	**454.00**
	10mm.	Rmt	**507.00**
	12mm.	Rmt	**759.00**
	14mm.	Rmt	**1031.00**

Sr No	Item Description	Unit	Rate (in Rs.) 2019-2020
	16mm.	Rmt	**1135.00**
	18mm.	Rmt	**1378.00**
	20 mm.	Rmt	**1553.00**
	22 mm.	Rmt	**2077.00**
	25 mm.	Rmt	**2521.00**
8	**Shifting and aligning ring girders** including removing tack welds and re-tacking in the correct position etc. complete as per specification for the pipes of following diameter.		
	From 1000 mm,Upto 1250 mm. dia.	Rmt	**520.00**
	Above 1250 mm.Upto 1500 mm. dia.	Rmt	**637.00**
	Above 1500 mm.Upto 1750 mm. dia.	Rmt	**751.00**
	Above 1750 mm.Upto 2200 mm. dia.	Rmt	**867.00**
	Above 2000 mm.Upto 2250 mm. dia.	Rmt	**981.00**
	Above 2250 mm.Upto 2500 mm. dia.	Rmt	**1096.00**
	Above 2500 mm.Upto 2750 mm. dia.	Rmt	**1210.00**
	Above 2750 mm.Upto 3000 mm. dia.	Rmt	**1328.00**
	Above 3000 mm.Upto 3250 mm. dia.	Rmt	**1443.00**
	Above 3250 mm.Upto 3500 mm. dia.	Rmt	**1559.00**
	Above 3500 mm.Upto 3750 mm. dia.	Rmt	**1673.00**
	Above 3750 mm.Upto 4000 mm. dia.	Rmt	**1799.00**
9	**Transporting** within 500 meters and fixing in position **stools, base plates, roller sets, grease box covers,** etc. including welding wherever necessary. The rate also to include fixing stools, base plates, etc. in true line and level, connecting the base plate to anchor bolts by flush welding including cutting the bolts, if required, assembling and aligning C. I. or M. S. roller sets of any size including oiling, greasing, etc. The rate also to include grouting anchor bolts, welding of two halves of grease box covers as directed by Engineer-in-charge, for pipes of following dia.		
	From 1000 mm,Upto 1250 mm. dia.	each	**1901.00**
	Above 1250 mm.Upto 1500 mm. dia.	each	**2056.00**
	Above 1500 mm.Upto 1750 mm. dia.	each	**2212.00**
	Above 1750 mm.Upto 2200 mm. dia.	each	**2366.00**
	Above 2000 mm.Upto 2250 mm. dia.	each	**2521.00**
	Above 2250 mm.Upto 2500 mm. dia.	each	**2676.00**
	Above 2500 mm.Upto 2750 mm. dia.	each	**2833.00**
	Above 2750 mm.Upto 3000 mm. dia.	each	**2985.00**
	Above 3000 mm.Upto 3250 mm. dia.	each	**3142.00**
	Above 3250 mm.Upto 3500 mm. dia.	each	**3297.00**
	Above 3500 mm.Upto 3750 mm. dia.	each	**3479.00**
	Above 3750 mm.Upto 4000 mm. dia.	each	**3605.00**
10	**Transporting** within 500 meters and aligning, fixing in position and tack welding **expansion joints** suitable for pipeline of diameters		

Sr No	Item Description	Unit	Rate (in Rs.) 2019-2020
	From 1000 mm,Upto 1250 mm. dia.	each	**6432.00**
	Above 1250 mm.Upto 1500 mm. dia.	each	**6670.00**
	Above 1500 mm.Upto 1750 mm. dia.	each	**6911.00**
	Above 1750 mm.Upto 2200 mm. dia.	each	**7151.00**
	Above 2000 mm.Upto 2250 mm. dia.	each	**13518.00**
	Above 2250 mm.Upto 2500 mm. dia.	each	**13820.00**
	Above 2500 mm.Upto 2750 mm. dia.	each	**14121.00**
	Above 2750 mm.Upto 3000 mm. dia.	each	**14330.00**
	Above 3000 mm.Upto 3250 mm. dia.	each	**14726.00**
	Above 3250 mm.Upto 3500 mm. dia.	eacj	**15029.00**
	Above 3500 mm.Upto 3750 mm. dia.	each	**15327.00**
	Above 3750 mm.Upto 4000 mm. dia.	each	**15630.00**
11	**Transporting** within 500 meters aligning and fixing in position and tack welding only, including marginal cutting, supplying and providing rubber packing etc. where necessary.		
	A) Minor fixtures such as manhole cover, pressure and non-pressure type blank flanges, loose rings, small pipes to form saddle bypass arrangement, plug plates, ladders, platform, stiffener rings, etc.	MT	**11513.00**
	B) Minor fixtures such as tees, domes, 'Y' branches, insulating flange ring assembly, etc.	MT	**5850.00**
12	**Gas cutting** (either square cut or V cut) pipes, plates, etc. of thickness.		
	Upto 5 mm.	Rmt	**87.00**
	Above 5 mm. Upto10 mm.	Rmt	**123.00**
	Above 10 mm. Upto14 mm.	Rmt	**158.00**
	Above 14 mm. Upto18 mm.	Rmt	**182.00**
	Above 18 mm. Upto22 mm.	Rmt	**252.00**
	Above 22 mm.	Rmt	**337.00**
13	**Gas cutting holes** upto 50mm dia (for plugs)		
	Thickness of shell :		
	5 mm. to 12 mm	No	**95.00**
	Above 12 mm	No	**133.00**
14	Providing **M.S. bar mesh** prepared out of 16 mm dia M.S. bar at 15 cm. c/c both ways, welded to flanged ring including tack welding of bars and fixing the same with nuts and bolts on open faces of outlet/inlet pipes in the sump or reservoir, etc. complete as directed by Engineer-in-charge.	Sq.m	**1746.00**

Sr No	Item Description	Unit	Rate (in Rs.) 2019-2020
15	Providing **permanent test points** on the pipe line as per drawing and as directed by Engineer-in-charge including providing and fixing sluice valves, road boxes for sluice valves of size 80 mm to 250 mm in one brick masonry chamber 300 mm x 300 mm clear C. M. 1:5 with 12 mm thick 1:3 cement plaster both inside and outside on M-100 c.c. 150 mm thick etc. complete as specified and directed.	No	**3915.00**
16	Supplying transporting, the **S.P. fire hydrants** including duck foot bend, S.V. and S.V. road box, painting the hydrant, fixing the saddle piece, supplying, and laying required length of C.I. pipeline and jointing the same spun yarn, molten lead including caulking, fixing the S.V. road box in one brick masonry chamber in 1:5 C.M. with 12 mm thick 1:3 cement plaster both inside and outside on 1:3:6: C.C.150 mm thick etc, complete specified and directed. [As per I.S.900/1965 Revised]	No	**15507.00**
17	**Hydraulic testing of M.S. pipeline** to specified pressure including cost of all materials and labour and water for testing for the length upto 1km., using reciprocating type pumps which should be able to provide specified		
	test pressure gauges and other necessary equipments, labour, operation charges, etc. required for testing. The rate under this item shall also include cost of retesting, if necessary.		
	Upto 600mm. dia.(I.D.)	km	**54504.00**
	Above 600 mm.upto 750 mm. dia.(I.D.)	km	**54584.00**
	Above 750 mm.upto 900 mm. dia.(I.D.)	km	**54710.00**
	Above 900 mm.upto 1050 mm. dia.(I.D.)	km	**54899.00**
	Above 1050 mm.upto 1200 mm. dia.(I.D.)	km	**55086.00**
	Above 1200 mm.upto 1500 mm. dia.(I.D.)	km	**55458.00**
	Above 1500 mm.upto 1800 mm. dia.(I.D.)	km	**56003.00**
	Above 1800 mm.upto 2250 mm. dia.(I.D.)	km	**56918.00**
	Above 2250 mm.upto 2500 mm. dia.(I.D.)	km	**57586.00**
	Above 2500 mm.dia. (I.D.)	km	**58252.00**
	Extra over initial KM		
	Upto 600 mm. dia.(I.D.)	km	**276.00**
	Above 600 mm.upto 750 mm. dia.(I.D.)	km	**397.00**
	Above 750 mm.upto 900 mm. dia.(I.D.)	km	**589.00**
	Above 900 mm.upto 1050 mm. dia.(I.D.)	km	**778.00**
	Above 1050 mm.upto 1200 mm. dia.(I.D.)	km	**1001.00**
	Above 1200 mm.upto 1500 mm. dia.(I.D.)	km	**1480.00**
	Above 1500 mm.upto 1800 mm. dia.(I.D.)	km	**2235.00**
	Above 1800 mm.upto 2250 mm. dia.(I.D.)	km	**3430.00**
	Above 2250 mm.upto 2500 mm. dia.(I.D.)	km	**4271.00**
	Above 2500 mm.upto 2750 mm dia (I.D.)	km	**5167.00**

Sr No	Item Description	Unit	Rate (in Rs.) 2019-2020
	Above 2750 mm dia (I.D)	km	**6096.00**
18	Providing and applying with mechanical arrangement 1:3 proportion **cement sand gunite, 40 to 50 mm thick** to M. S. pipe surface under 2.1 kg. per sqcm. to 2.80 kg. per sqcm. pressure including removing the loose materials as directed by Engineer -in- charge and including scrapping the surface with wire brushes, degreasing, cleaning by compressed air and providing fixing BRC fabric no.14 as reinforcement, curing for 21 days, disposing off the rebound materials within a lead of 50 M, etc. complete as directed by Engineer-in-charge.	Sqm	**609.00**
19	Providing and applying pipe **coating of fibres, coaltar and solvent based rubber modified bituminous primer** of density 0.92 gms/cu cm and viscosity of 1000-2000 cps @ 150 gms/sqm followed by seven layers(4mm thick) of polythene polymerised bitumen and polyester of local 7 layers) pipe coat 4 mm should conform to requirement of IS-10221 and AWWA C-203 for per-fabricated tapes including covering cost on pipe coating. Rates shall include cost of material coating and wrapping over the pipes, handling charges, preparation of pipe surface, all labour, material, etc. complete.	Sqm	**656.00**
	Note : Pipe coating is to be done at laying work site only.		
20	Providing and applying with mechanical arrangement **cement sand gunite of 50 mm thickness** to floors, walls, floor slabs or any other structure under 2.1 kg. per sqcm. to 2.80 kg. per sqcm. pressure including removing the loose materials on surface, cleaning with comperssed air, degreasing, etc. including scaffolding and curing for 21 days, providing and fixing BRC fabric no. 14 but excluding cost of reinforcement, if any and removing rebound materials within a lead of 50 M, etc. complete as directed by Engineer-in-charge (for GSRs and buildings.)	Sqm	**600.00**

Sr No	Item Description	Unit	Rate (in Rs.) 2019-2020
21	Providing and applying with **mechanical arrangement cement sand gunite of 50 mm thickness** to floors, walls, roof slabs or any other structure under 2.1 kg. per sqcm. to 2.80 kg. per sqcm. pressure including removing the loose materials on surface, cleaning with compressed air, degreasing, etc. including scaffolding and curing for 21 days, providing and fixing BRC fabric no. 14 but excluding cost of reinforcement, if any and removing rebound materials within a lead of 50 M, for staging and bottom of bottom slab, etc. complete as directed by Engineer-in-charge **(for RCC ESRs)**	Sqm	**530.00**
22	Providing and making inner **cement mortar lining to M.S. pipes** with mechanical devices in cement mortar 1:1 proportion, including cost of all materials, labour, special sand required, machinery, power generation, all equipments and taking necessary access openings and manholes, cuts at suitable intervals as directed by Engineer-in-charge and rewelding the same after done with doubler plates pipes including necessary excavation, refilling concerte breaking and remaking if any, breaking guniting and remaking the same, repainting whereven required with epoxy paint in 3 coats, all dewatering including emptying the pipeline and refilling the same after done with (water to be supplied by department free of cost within 5 km. lead at fixed point and all other arrangements to be done by agency), including carrying out "C" value performance test of pipeline, complete job as per the directions of the Engineer-in-charge.		
i	9 mm thick for pipesupto 700 mm dia.		
	(Increase 25% for alignment in hilly area)	Sqm	**476.00**
ii	12 mm thick forpipes upto 700 mm dia.	Sqm	**552.00**
23	Providing and applying of **elastomeric (450% elongation), thermoplastic, fire retardant, coating** skin tensile strength 18 to 21 kg/cm2, antifungal antibacterial anticorrosive, graft co-polymer Coating on smooth plastered surface. 100 Micron dyufilm thickness of self bonding with plastered surface and 100 Micron of top cost. For sewage treatment plant (R. C. C. Tank inside coating) and water treatment plant.	Sqm	**1547.00**

Sr No	Item Description	Unit	Rate (in Rs.) 2019-2020
24	Providing and applying **external and internal coating for steel structures** in sewage treatement plant/water treatement plant with elastomeric (450% elongation), thermoplastic, fire retardant, coating skin tensile strength 18 to 21 kg/cm2, antifungal antibacterial, anticorrosive, graft co-polymer. 50 Micron DFT. of self bonding with steel, 50 Micron DFT. of inner coat and 50 Micron DFT of top coat.	Sqm	**904.00**
25	Providing and applying of **elastomeric (450% elongation), thermoplastic, fire retardant, coating** skin tencile strength 18 to 21 kg/cm2, antifungal, antibacterial anticorrosive, graft co-polymer coating on external pipe lines in un laid/laid condition after proper cleaning. 50 micron DFT of self bonding grade with metal surface, 50 Micron DFT of self bonding grade with metal surface, 50 Micron DFT inner coat and 50 Micron DFT of top coat.		
	1) water and sewage pipelines (external) in unlaid condition.	Sqm	**946.00**
	Item No. 25 Contd.		
	2) water and sewage pipelines (external) in laid condition.	Sqm	**970.00**
26	Providing and applying of elastomeric (450% elongation), thermoplastic, fire retardant, coating skin tensile strength 18 to 21 Kg/cm2, antifungal, antibacterial anticorrosive, graft co-polymer coating on internal surface of pipe lines. 100 Micron DFT of site bonding grade with steel surface and 100 Micron DFT of top coat.		
	1) Pipe lines (external) in unlaid condition.	Sqm	**1191.00**
	2) Pipe lines (external) in laid condition.	Sqm	**1271.00**
27	Providing and applying of **elastomeric (450% elongation), thermoplastic, fire retardant, coating** skin tensile strength 18 to 21 kg/cm2, antifungal, antibacterial anticorrosive, graft co-polymer coating on cleaned steel reinforcement bars. 80 to 100 micron DFT With self bonding trade of bar coating.		
	1) 6mm dia	M.T.	**43309.00**
	2) 8mm dia	M.T.	**33140.00**
	3) 10mm dia	M.T.	**26260.00**
	4) 12mm dia	M.T.	**21852.00**
	5) 16mm dia	M.T.	**16363.00**
	6) 20mm dia	M.T.	**13316.00**
	7) 25mm dia	M.T.	**10515.00**
	8) 32mm dia	M.T.	**8427.00**
	9) 40mm dia	M.T.	**6400.00**

Sr No	Item Description	Unit	Rate (in Rs.) 2019-2020
28	Providing and applying of **H D P E coating** for MS pipe internally as well as externally including cost of H D P E powder moulding pipe grade, labour, scrapping the pipe surface with wire brushes, degreasing, cleaning by compressed air and surface grinding and finishing including cost of loading , unloading and handling of pipe at factory etc. complete as directed by Engineer -in -charge.		
	HDPE Coating thickness in micron		
	External Internal Total coating thickness		
1	0 2000 2000	Sqm	**2383.00**
2	2000 1000 3000	Sqm	**2993.00**
3	3000 1000 4000	Sqm	**3440.00**
4	3000 2000 5000	Sqm	**3953.00**

Section - I- (XVII) - TREATMENT PLANT (W.T.P. & S.T.P.)				
Sr No	**Item Description**	**Unit**	**Rate (in Rs.)**	
1	Designing (aesthetically), providing and constructing high rate **Unconventional Water Treatment Plant** i.e. Simplified Water Treatment Plants consisting of Civil works including cost of Providing and applying Epoxy paint to inside surface of water retaining structures in contact with chlorine and providing anti - termite treatment to entire structure below Ground level, ceramic tiles for floring, Acrylic emulsion with silicon additives paint from outside. stainless steel railing, Mechanical and Electrical components of variours sub-works as given below : including necessary hydraulic testing, structural testing and trial run for 3 months, etc. complete as directed by Engineer-in-charge (turn-key job) works. **1) Aeration Fountain** **2) Inlet arrangements** **3) Mixing channel** with ventury flume and flow measuing arrangement **4) Inlet channel** **5) Flocculator -** Confirming to I.S. 7208-1974 (Type - C) with detention period of 30 minutes **6) Tube Settlers -** "Designing, fabricate and construct Tube Settlers with square or any other shaped tube like Circular, Cheveron, Hexagonal etc. having proven performance." **7) Rapid sand gravity filters. <u>All valve shall be glandless.</u>** **8) Filter house** **9) Chemical house** **10) Alum tanks** 2 Nos. with mixing carrying and dosing arrangements with piping. **11) 100 kg chlorine cylender for capacity upto 5 mld and chlorine tonner for capacity above 5 mld.** **12) TCL solution tank** with mixing, carrying and dosing arrangement with piping **13) Bye-pass arrangement** **14) External and internal electrification** **15) Laboratory equipments** **16) Wash water tanks** of capacity equal to 12 minutes to wash specified number of filter beds at time at 600 lit/m2/m under head of 12 m at under drain			

Sr No	Item Description	Unit	Rate (in Rs.)	
	17) Wash water pumps with 100% standby **18) Air blowers** capable of delivering 600 LPM per square metre of free air of filter area at 0.4 Kg/sqcm at the under drains (100%standby) **Air blowers shall be adopted for WTP having capacity more than 3 mld only. Below 3 mld capacity, Air blowers shall not be adopted.** **19) Pure water sump** capacity equal to 1 hour pumping capacity **20) Pure water pump house** over the sump / by the side of sump **21) Drainage arrangements** **22) Alum store** **23) Sanitary block** with necessary water supply and drainage arrangement and internal WBM roads **24)** These rates are **applicable for seismic zones 2,3 and 4** **25)** Rates given below are inclusive of uplift pressure if any and dewatering during the entire work **26)** All RCC structures shall be constructed in M-250. Structures in contact with water shall be in M-300. **27)** Disposal of waste from WTP: Safe disposal arrangement to nearby nalla including cost of all materials & labours irrespective of distance upto Nalla **28)** Unconventoinal Treatment Plants less than 1 MLD capacity shall not be constructed. **Note :** Conditions from Sr. No. **1 to 27** shall form a part and parcel of the tender and must be included in draft tender papers. **Unconventional Water Treatment Plant**			**LABOUR**
S.No.	**Capacity in Mld**	**Unit**	**Rate in Lakhs**	**Rate in Lakhs**
1	Fixed cost for 1 MLD	Job	**53.66**	**20.71**
2	Add for capacity above 1 MLD upto 2 MLD	MLD	**24.29**	**9.20**
3	Cost of 2 MLD Treatment Plant	Job	**77.95**	**29.92**
4	Add for capacity above 2 MLD upto 5 MLD	MLD	**18.23**	**6.89**
5	Cost of 5 MLD Treatment Plant	Job	**132.60**	**50.63**
6	Add for capacity above 5 MLD	MLD	**14.17**	**5.51**
7	Cost of 10 MLD Treatment Plant	Job	**203.45**	**77.84**
2	Designing (aesthetically), providing and constructing and commissioning Conventionl Water Treatment Plant consisting of all Civil, works including cost of Providing and applying Epoxy paint to inside surface of water			

Sr No	Item Description	Unit	Rate (in Rs.)	
	Item No.2 Contd. retaining structures in contact with chlorine and providing anti - termite treatment to entire structure below Ground level, **ceramic tiles for floring, Acrylic emulsion with silicon additives paint from outside. stainless steel railing,** Mechanical and Electrical components of variours sub-works as given below : including necessary hydraculic testing, structural testing equipment testing, trial run for a period of 3 months, etc. complete as directed by Engineer-in-charge (turn-key job). **1) Aeration Fountain** Plan area not less than 0.625 square metre per MLD **2) Ventury Flume** With necessary devices, consisting of simple mechanical indicator. (Pedestal type gauge) **3) Flash Mixer** Rapid mixing device, detention time 60 seconds to give velocity gradient 300 to 400 sec-1 vane mixer type confirming to I.S. 7090 of 1985. **4) Flocculator** Confirming to I.S. 7208 of 1974 (Type-C) with detention period of 30 minutes. **5) Clarifier** Horizontal flow circular tank, detention period 2-5 hours, overflow rate 30 cubic metre per square metre per day (to be specified), Weir loading not more than 300 cubic metre per metre per day, with mechanical sludge scraper conforming to I.S. No. 10313 -1982 with necessary inlet arrangements. **6) Rapid Sand Filters and Filter House** Filter designed for filteration rate of 5,000 liters per square metre per hour, minimum 2 beds for plant upto 10 MLD, for larger plants as specified, filters to be located in filter house with roof slab, pipe gallery and platform minimum 5.5 metre in width with constant rate filtration or declining rate filtration. All valve shall be glandless.			

Sr No	Item Description	Unit	Rate (in Rs.)	
	a) Filter Sand Effective size 0.45 to 0.70 mm, uniformity coefficient not more than 1.7, nor less than 1.3, depth of water over sand 0.75 M, free board 50 cm, gravel 0.45 M in depth, sand and gravel confirming to I.S. 849 (i)-77, back wash by air wash, standard appurtenances **b)Wash Water Tank** Capacity to be specified and suitable to supply water to wash specified number of filter beds at a time 12 minutes @ 600 lit/sqm/min. under a head of 12 m at under drain. **c)Wash Water Pumps** Capacity to fill water tank in 1 hour with 100 % standby. **d)Air Blowers** Capable of delivering 600 LMP per square metre of free air, of filter area at 0.4 kg/square cm at the underdrains (100% stand by) for period of 5 min. **Air blowers shall be adopted for WTP having capacity more than 3 mld only. Below 3 mld capacity, Air blowers shall not be adopted.** **7) Chemical House in Two Storeys** a)Ground floor to accommodate 7 days alum requirement and sundry storage (Minimum 4 m height) b)First floor to accommodate alum and lime tanks. chain pulley block etc. (min. 5 m height) **c) Solution tanks** Minimum 3 tanks (one for preparation. second for dosing and third as standby), each tank capable of giving 8 hours maximum dose without interruption, minimum free board 0.30 M, trays for dissolving, level indicator, mechanical agitation devices, solution feed and drain lines, solution feed device (constant head device,strength of solution upto 10% only) conforming to I.S. 9222 part-I/1979. **8) Pure Water Sump and Pump House** **a) Capacity of sump** One hour of designed flow. **b) Pump House** Pump house of required size over the sump or by the side.			

Sr No	Item Description	Unit	Rate (in Rs.)	
	9) Store House Suitable for alum storage of three months and 7 days temporary storage, 7 days TCL requirement in mansoon with 20 % extra capacity for other sundry articles. **10) Vacuum feed type chlorinators - make to be approved by MJP.** a) Confirming to I.S. 10533 - A Part-II 1983. b) Rate of withdrawal. **Temperature Kg.of Chlorine discharge per day**			
	Degree "C"		Cylinders	
		45	67	Tonners
	10	6.35	9.50	110
	15	10.75	16.10	130
	20	14.50	21.24	254
	27 & above	18.70	28.12	315
	c) Chlorinator equipment and container room: to confirm to I.S. 10553 Part - I 1983. **d) 100% Standbye** shall be provided **e) 100 kg chlorine cylender for capacity upto 5 mld and chlorine tonner for capacity above 5 mld.** **11) By pass arrangements -** C.I. pipes. i) By passing all units of T.P. ii) By passing flash mixer, clariflocculator. iii) By passing flash mixer, clariflocculator & filter units **12) Disposal of waste from WTP :** Safe disposal arrangement to nearby nalla including cost of pipe **13) For WTP of capacity** 30 mld and more additional arrangement for backwash water recycle shall be provided, including sump, pumping machinary, rising main etc. complete. **14) Drainage arrangements** To decant all units of WTP with CI pipes upto boundary of each unit and further extension with RCC pipes to nearby nalla. **15) Electrical installation.** Both internal and external including entire plant area. **16) Laboratory equipment.** As per requirement (to be specified during tendering.)			

Sr No	Item Description	Unit	Rate (in Rs.)	
	17) Sanitary blocks. Carpet area-15 square metre minimum upto 25 Mld and 25 square metre above 25 Mld. **18) Administrative block and internal road.** To accommodate office room. chlorine room, laboratory room, panel board room, blower room etc. and WBM road to connect all units from main gate of plot. **19)** Rates given below are **inclusive of uplift pressure if any and dewatering during entire work.** **20)** Disposal of waste from WTP: Safe disposal arrangement to nearby nalla including cost of all materials & labours irrespective of distance upto Nalla **21)** For WTP of capacity 30 mld and more additional arrangement for backwash water recycle shall be provided, including sump, pumping machinary, rising main etc. complete. **22)** All pipes conduits channel with 20% overloading. **23)** These rates are applicable for seismic zones-2,3 and 4. **24)** All RCC structures shall be constructed in M-300. **25)** All pipes and conduits channel with 20% overloading capacity. **Note :** Conditions from Sr. No. **1 to 25** shall form a part and parcel of the tender and must be incorporated in draft tender papers. **Rates for Conventional Treatment Plants**			**LABOUR**
S.No.	**Capacity in Mld**	**Unit**	**Rate in Lakhs**	**Rate in Lakhs**
1	Upto 5 MLD	MLD	**34.47**	**13.28**
2	Cost of 5 MLD Treatment Plant	Job	**172.35**	**66.45**
3	Add for capacity above 5 MLD upto 10 MLD	MLD	**25.07**	**9.49**
4	Cost of 10 MLD Treatment Plant	Job	**297.69**	**113.91**
5	Add for capacity above 10 MLD upto 20 MLD	MLD	**15.66**	**6.19**
6	Cost of 20 MLD Treatment Plant	Job	**454.37**	**175.64**
7	Add for capacity above 20 MLD upto 50 MLD	MLD	**14.63**	**5.70**
8	Cost of 50 MLD Treatment Plant	Job	**893.06**	**346.48**
9	Add for capacity above 50 MLD upto 100 MLD	MLD	**8.77**	**3.36**
10	Cost of 100 MLD Treatment Plant	Job	**1331.76**	**511.65**
11	Add for capacity above 100 MLD	MLD	**7.54**	**2.88**

Sr No	Item Description	Unit	Rate (in Rs.)	
3	Designing (aesthetically), providing, fabricating, Package Water Treatment Plant. At the shop, transporting to site, installing, testing and commissioning at the site, giving necessary one month's free test and trial run with guarantee for one year, etc. complete. **Prefabricated Package Water Treatment Plant comprising following** **1) Rapid mixing channel** in M.S. sheets and M. S. baffle. **2) Flocculator** not less than 10 minutes detention, in M.S. prefabricated box, flocculation being achived either by glass pebbles of graded size or PVC tetrapod or equivalent arrangement to ensure good flocformation. **3) Plate or tube settlers** of not less than 30 minutes detention, in M.S. prefabricated box, plates / tubes mounted in the settler basin with inclination of not less than 60 degree to horizontal. **4) Rapid sand gravity filter** in M. S. prefabricated box with filter sand not less than 500 mm thick, supported on false floor below with polypropylene nozzles spaced at not more than 500 mm centres in either direction **5) Backwashing, inlet facilities** only shall be provided. Department shall provide either ESR giving 8 to 10 M head at filter nozzles or backwash pump, having flow rate of 0.6 Cum per minute per square metre of filter bed. (Limit upto 5.0 M. from W.T.P. face) **6) All civil works** for foundation, consisting of raised RCC platform above G.L. or walls in B.B. masonry or UCR masonry shall be provided as per needs at site. **7) Bypass in the form of pipes or M.S. channels** included in the design, effecting bypass of such new tank and filter individually or both. (Limit upto 5.0 M. from W.T.P. face) **8)** The entire **M.S. fabricated tank** provided with FRP lining (5 mm thick) to inside face in contact with water epoxy painting- two coats with one coat of primer on outside. The thickness of plates employed shall not be less than 6 mm			

Sr No	Item Description	Unit	Rate (in Rs.)	
	9) Alum dosing and mixing arrangements to be provided in twin tanks, each of 8 hours capacity, capable of importing does of 20 ppm with 5% solution. The alum tanks provided with a dose in steps of 5 ppm and entire unit mounted on the top of flocculator / settler box, in the form of prefabricated structure, with access platform and ladder. Alum boxes with FRP lining (5 mm thick) inside and epoxy paint two coats with one coat of primer on outside. **10) Both flocculator and settling basins** provided with hopper bottom with slope not less than 45 degrees to the horizontal drain pipes and valves provided to both flocculator and settling basin. **11) Flow ratings** to conform following parameters : **a)** Velocities in channels not to exceed 0.6 M./Second. **b)** Velocities in filter outlet pipes and valves not to exceed 1 M./Second. **c)** Velocities in interconnecting pipe and controls not to exceed 1M./Second. **d)** Backwash with air : Not required. **e)** Backwash with water : Not less than 0.6 M./ Sqm. of filter bed area in filter box. **12)** Free board for all units not less than 300 mm **13)** Disposal of waste from WTP: Safe disposal arrangement to nearby nalla including cost of all materials & labours irrespective of distance upto Nalla **14)** Rates as above include all taxes, octroi and duties which would be specific to the site locations. **Note :** Conditions from Sr. No. **1 to 13** shall form a part and parcel of the tender and must be incorporated in draft tender papers. **Rates for Package Water Treatment Plant**			**LABOUR**
S.No.	**Capacity in Mld**	**Unit**	**Rate in Lakhs**	**Rate in Lakhs**
1	21 Cum / Hr. (0.50 MLD)	Each	**28.61**	**11.09**
2	34 Cum / Hr. (0.80 MLD)	Each	**35.20**	**13.50**
3	42 Cum / Hr. (1.00 MLD)	Each	**39.48**	**15.09**
4	63 Cum / Hr. (1.50 MLD)	Each	**49.52**	**18.99**
5	83 Cum / Hr. (2.00 MLD)	Each	**58.70**	**22.48**
6	125 Cum / Hr. (3.00 MLD)	Each	**75.61**	**28.88**
	Note : Depending upon the capacity required for the scheme,one of the above capacity should be choiced.			

Sr No	Item Description	Unit	Rate (in Rs.)	
4	**SEWAGE TREATMENT PLANT (STP)**			
A	Designing (aesthetically), providing, and constructing and giving satisfactory trials of modernised **Sewage Treatment Plant** consisting of receiving chamber, screen chamber, grit chamber, measuring flume, distribution chamber with primary and secondary treatment, etc. as detailed below, administration block of suitable size including allied units for waste disposal with all civil and mechanical works involved, etc. complete (Turn key job).			
	Primary and Secondary Treatment (Extended Aeration Process)			**LABOUR**
S.No.	**Capacity of Plant**	**Unit**	**Rate in Lakhs**	**Rate in Lakhs**
1)	1. Upto 10 MLD	MLD	**50.13**	**18.99**
2)	2. Cost of 10 MLD Plant	Job	**501.37**	**189.84**
3)	3. Add for capacity above 10 MLD upto 20 MLD	MLD	**42.52**	**16.01**
4)	4. Cost of 20 MLD Plant	Job	**940.06**	**355.65**
5)	5. Add for capacity above 20 MLD	MLD	**37.61**	**14.28**
6)	6. Cost of 50 MLD Plant	Job	**2068.13**	**784.10**
7)	7. Add for capacity above 50 MLD	MLD	**22.34**	**8.48**
8)	8. Cost of 100 MLD Plant	Job	**3185.21**	**1208.11**
B	Designing (Aesthetically) Providing and constructing, hydraulic testing commissioning and giving satisfactory trials of **modernised sewage treatment plant** consisting of inlet chamber, screen chamber, Detritus tanks, Parshall flume, primary settling tanks, Aeration tanks, Secondary settling tanks, Sludge Sump and Pump House ,Sludge Thickner, Primary digester , Secondary digester, SST Sump and Pump house, Chlorine contact tank, Chlorinators, Chlorinator room, sump cum blending tank, PST sludge sump cum blending tank,Pump house, Sludge Centrifuge, gas holder, necessary piping work with required valves, gates, drains, pathways, Administrative Building cum Laboratory, Laboratory equipments, tools and plants, Spare parts etc. complete as turnkey job with all involved civil electrical and mechanical works inclusive of following items, units as per detailed specification for civil, Electrical and Mechanical Components with all duties and taxes etc.complete.			

Sr No	Item Description	Unit	Rate (in Rs.)	
	1) Inlet Chamber:			
	Designing, providing and constructing R.C.C. (M:250) Inlet chamber designed for the peak flow 2 DWF including necessary excavation in all types of strata including walkway around the periphery. Each compartment will have phosper bronze, steel gate with extension rod, head stock, opreating wheel, G.I. Pipe railing etc. The work includes providing and making necessary arrangements to connect the flow to screen chamber by approach channel as directed and as per specifications.			
	2) Screen Chambers:			
	Designing, providing and constructing and testing commissioning screen chamber, designed for average 1DWF & maximum 2 DWF in RCC (M-250), including inlet pipe/Channel from inlet chamber outlet, pipe/channel to detritus tank, free board of 0.50 m minimum, RCC walkway 1.2M wide with G.I. Pipe railing. RCC stair case of 1.2 m width from G.L. to screen chamber.			
	3) Detritus Tank :			
	Designing, providing and constructing continuously grit removal type of Detritus Tank, mechanically operated in RCC (M-250) capable of removing 100% 0.20mm size particle and above, having specific gravity 2.30, designed for one peak 2 DWF with suitable arrangement of separation of grit from putrescible solids including providing and making necessary arrangement of JB-1. inlet and outlet channels of required sizes as may be required to connect the flow to parshall flume etc. complete including hydraulic testing for water tightness of the structure having minimum free board of 0.30 m, washout arrangement to grit chamber and platform 1.20m wide RCC walkway with G.I. pipe hand railing shall be provided. A pit for collecting grit conveyed by conveyor shall be provided It should be suitable to handle the grit for carting. All arrangments shall be as per detailed spaecifications and as directed.			
	4) Parshall Flume:			
	Designing, Providing and constructing Parshall Flume Channel in RCC(M:250) for			

Sr No	Item Description	Unit	Rate (in Rs.)	
	5) measuring quantity of sewage received at the treatment works, max flow of 2 DWF and minimum flow of 1/2 DWF including providing and making necessary arrangment of approch channel as may be required to connect the flow having minimum velocity of 0.3m per second to Distribution Box (DB-1) The unit shall be provided with walkway & RCC staircase having width of 1.20 m each etc. complete, including hydraulic testing for water tightness of the civil structure having free board of 0.6 m including electrically operated, flow indicating and flow integrating devices having a standby of float operated ROF meter. All arrangments as per specifications.			
	Primary Settling Tanks With Equipments :			
	Designing, providing, constructing and hydraulic testing in RCC (M-250) water tight Primary Settling Tanks of 1 DWF capaicty with feed chamber sludge and effluent chamber, base adequately supported providing 1.20m wide clear peripherial and appraoch walkway interconnecting C.I. double flanged pipes from feed chamber of the clarifier distribution well grouting wherever necessary, including foundation etc. as per speicifications water depth at outer side shall be minimum 3.0 meters, weir loading shall not be greater than 125 cum DMF for average flow Bottom slope shall be 1:12			
	The floor of clarifier shall have 40 mm thick (min.) screed course of cement grout of mix in C.M. 1:2 Detention period shall be 2.25 hrs. dispersion box and stiffened weir plate made of mild steel plate not less than 8 mm thick, aniticorrosive epoxy paint on both faces shall be provided Minimum free board of 0.50 m. be provided it includes inlet pipe from distribution chamber, central shaft inlet baffle outlet chamber, Scum remover, skimming device, scum chamber, connecting channel from PST outlet chamber to DB-2 as per detailed specifications.			
	6) Aeration Tank (AT) :			
	Designing, providing and constructing in RCC mix (M-250) Aeration Tank in compartments to handle combined flow of 1 DWF, incoming flow and recirculation flow including construction of inlet, outlet and distrbution chamber DB-3 and providing 1.20m wide clear peripherial and approach walk ways, expansion joints wherever necessary, including foundation etc.			

Sr No	Item Description	Unit	Rate (in Rs.)	
	as per specifications. Peak factor shall be 2, F/M ratio shall be 0.40, low speed aerator speed between 20 to 100 RPM recirculation flow @ 50% and free board 0.60 m Depth, (SWD) 3.50 m minimum D.O. level at A.T. 2 Mg/Lit, MLVSS concentration shall be 2500 Mg/Lit and MLVSS concentration shall be 2000 Mg/Lit, HRT shall be 4 to 6 hours and STR 6-8 days. It should have compartents for washing, oxygen transfer capacity of mechanical aerator shall not be less than 1.5 Kg/KWH, BOD of effluent 20 mg/lit with input to aerator 0.15 to 0.30 Kwh/1000 Cum of Aeratoin tank. All related works shall be as per detailed specifications.			
	7) Secondary Settling Tanks with equipments :			
	Designing, providing & constructing in RCC (M:250) water tight secondary settling tank having detention period 2 hours and SWD shall be 4.20 meter. The effluent BOD & SS from the secondary clarrifier shall not be more then 20 Mg/lit and 30 mg/lit respectively. It should be hydraulically tested, bottom floor slope of 1:12 and free board of 0.60 m minimum Dispersion box shall be made of Mild Steel plate not less then 8 mm thick with anticorrosive epoxy paint from both faces and well stiffened The sewage admitted at the centre flowing upward and outwards towards periphery be slowly and continuously collected towards a convenient discharge point near centre by a rotating wheel arm. The Clarifier will be completed with end drive half rotating bridge, structural steel rake, over flow weir, walkway diffuser, over load alarms, having push bottons, starters for the clarifier, walkway and the suitable sludge withdrawing arrangement with flush valve capable of withdrawing moisture content not more then 97% to 98%, slote.oil and Grease < 10 ppm recyclable qaulity of water for industrial / agricultural purpose			
	rotating sludge scrapper mechanism fitted with squeezes including providing and making necessary arrangement to connect the flow to outlet chamber (DB-4) then the gravity mains for final diaposal and as per detailed specifications and obligatory provision. All other arrangements shall be as per detailed specifications.			

Sr No	Item Description	Unit	Rate (in Rs.)	
	8) Sludge Thickner with equipments:			
	Designing providing and constructing water tight of Sludge Thickner (Gravity type) including foundation in RCC (M-250) with inlet and outlet chamber influent well, inlet and outlet pipes, with sludge pit and sludge removal arrangment, grouting wherever necessary with walkway all around of 1.20 m width G.I. pipe railing interconnecting CI pipes all complete as per specifications Detention time 24 hours. SWD shall be 4.25 metre with necessary fixed bridge scraper arrangment as per detailed speicifications and necessary inlet and outlet arrangement. All other arrangement as per detailed specifications.			
	9) Primary Digester with mixer equipment (Fixed Cover)			
	Designing, providing and constructing unit of water tight and gas tight Primary Digester suitable for 1 DWF plant and complete with pipe gallery, building, staircase for access from dome of digester into inside staircase, walkways at springing levels etc. walls and base slab being in RCC M:250, domes in stucutural concrete including providing burners and civil works for gas collection, grouting wherever necessary etc. complete as per specifications. It should be designed for min 90 C and max. 450C. and minimum detention time of 30 days, water depth shall not be more then 8.5m free board shall be 0.6m with inlet and outlet arrangement of C.I. flanged pipes including giving hydraulic testing and air tightness testing. The item includes providing works for collecting Gas and Gas burner as per specification.			
	10) Secondary Digester with equipment (Fixed cover)			
	Designing, providing and constructing including foudation unit of watertight and gastight Secondary Digester to deal with 1 DWF complete with pipe gallery, building, staircase for access from dome of digester into inside, staircase to walkways at springing levels etc., Walls and base slab and domes being in RCC M:250, providing arrangement for digested sludge from digesters to centrifuge, providing burners and civil works for gas collection grouting wherever necessary etc. complete. as per specifications and obligatory provision All other arrangements as per detailed specifications.			

Sr No	Item Description	Unit	Rate (in Rs.)	
	11) S.S.T. Sump & Pump House with recirculation Pumps and Sludge Pumps to Digester:			
	Designing, providing & constructing Sump & Pump house of requisite capacity with ceiling height not less then 6.M., Sludge stream for recirculation to aeration tank & excess sludge to SCBT, including C.I. Piping to carry this flow to sump as per detailed specification & as directed by Engineer-in-charge.			
	12) Chlorine Contact Tank :			
	Designing, providing and constructing Chlorine Contact chamber of adequate capacity to deal with 1 DWF. Average flow. The chlorine contact tank should be of 30 minutes capacity during average flow to achieve 99.99% coliform reduction. Chlorine dose shall be maintained as per standard provisions including provisions including designing, providing and constructing water supply arrangment for chlorination, including providing dewatering and by-pass arrangements jointing to final effluent main and outlet weir etc complete. The effluent quality should match with the standards laid down by Maharashtra Water pollution Control Board and as per the obligatary provision and detailed specifications and as directed by Engineer-in-charge.			
	13) Chlorinator and chlorinator Room/Tonner Room.			
	Designing, providing and constructing chlorinators vaccum type 2 Nos each having capacity of 10 Kg/Hr as per obligatory provisions and detailed sprcifications with necessary provision of chlorinator room having floor area not less then 30 Sqmt including automatic residual chiorine controller with actuator and residual chlorine analyser including cost of chlorine cylinder, piping, valves, measuring and controlling equipments, safty devices, lifting equipments, etc. complete as per I.S - 10553 (Part-II) 1982.The tonner room should have 3 MT capacity crane for loading and unloading facility. Tonner storage should distincitly isolated and should be for minumum 10 Tonners space and arrangements as per gas laws 1981 and factory act shall be provided. and all other matching amenities be provided,			

Sr No	Item Description	Unit	Rate (in Rs.)	
	5 MT gantry shall be provded for full length of Tonner room at 6 m height from floor level, with /outlet chember and treated effluet outlet channel etc. complete as per detailed specicifications.			
	14) Sump cum Blending Tank (SCBT)			
	Designing providing and constructing sump cum blending tank of appropiate size and detention time with free board of 0.60 m. The slope of floor 1:4 with suction pit at the centre as per detailed specicfications and obligatory requirements.			
	15) P.S.T. Sump Cum Blending Tank, Pump House with recirculation pumps:			
	Designing providing and constructing pump house of appropriate size with pumps, ceiling height minimum 6m over the circular sump for discharging the sludge to thickner and recycling of flow for blending with C.I. piping etc. complete as per detailed specifications.			
	16) Sludge Centrifuge Room with Centrifuges.:			
	Designing, providing constructing and installing including foundation etc. Sludge Centrifuge to handle the sludge flow of one day in one hour per unit with sludge dewatering unit drain etc. Complete as per specifications. sludge centrifuge with all necessary arrangements as per detailed specifications mentioned in Volume -II and Volume - III of tender and obligatory provisions, be provided with satisfactory functioning.			
	17) Gas Holder:			
	Designing, providing and constructing gas holder having gas collection system, gas flow meter and gas burner with floating dome arrangement and storage time 6 hrs. to be constructed in M-250 having appropriate diameter as per detailed specifications and obligatory provisions. The floating dome shall be of 8mm thick M.S. Plate minimum and shall be provided with two coats of anticorrosive epoxy coating from both faces.			
	18) Outfall Sewer :			
	Designing providing and constructing appropriate Outfall Sewer of R.C.C. NP-2 pipe, to discharge treated effluent, untreated effluent form outlet chamber (after secondery clarifier) to the local nallah at a point shown on the drawing including necessary chambers for inspection / cleaning including necessary excavation dewatering, refilling, concrete encasing/bedding concrete steps to reach the			

Sr No	Item Description	Unit	Rate (in Rs.)	
	nallah bed level. pitching and energy dissipation chamber in the nallah portion etc. complete.			
	19) Piping work in C.I.-LA Class including Sluice Valve, Reflux Valve, M. S. Gate.			
	Providing laying and jointing pipes other than those already included in the above items for interconnection by-pass drains etc. of all units including adequate numbers of manhole chambers. The item includes excavations, refilling and hydraullic testing of pipes,valves , gates ,accessiories and cost of jointing materials The item includes required channels with gates for interconnection of units by pass drains etc. for all units and as directed etc. complete as per detailed specifications.			
	20) Administrative Building Cum Laboratory (G+1)			
	Designing providing and constructing Adminisrative Building, Office Cum Laboratory including stores. This shall be a building having appropriate Carpet area at ground floor and at first floor complete as per specifications including necessary excavation, foundation in RCC M-200 framed structure B. B. masonry (II-Class in C. M. 1:6) 20 mm cement plaster in C. M. 1:3 inside and outside painting. Alluminum door and window with glass pannels, mosaic tile flooring and skirting and all other allied items, fixtures fastening electrification arrangement water supply arrangment etc. complete. The building will have laboratory on upper floor of administrative building and should be so centralised that it should not be attached with any unit but should have complete control of every unit as per Laboratory Equipment, beautification, telephone and intercom arrangement and Wireless system etc. complete			
	Note : Conditions from Sr. No. **1 to 20** shall form a part and parcel of the tender and must be incorporated in draft tender papers. **Primary and secondary treatment-with digesters, sludge drying beds etc. complete.**			
S.No.	**Capacity of Plant**	**Unit**		
1	Upto 10 MLD	MLD	**59.55**	**22.77**
2	Cost of 10 MLD Plant	Job	**595.38**	**227.74**
3	Add for capacity above 10 MLD upto 20 MLD	MLD	**52.22**	**19.98**

Sr No	Item Description	Unit	Rate (in Rs.)	
S.No.	**Capacity of Plant**	**Unit**		
4	Cost of 20 MLD Plant	Job	**1117.63**	**427.56**
5	Add for capacity above 20 MLD	MLD	**44.91**	**17.08**
6	Cost of 50 MLD Plant	Job	**2465.04**	**940.04**
7	Add for capacity above 50 MLD	MLD	**26.85**	**10.20**
8	Cost of 100 MLD Plant	Job	**3807.62**	**1449.47**
5	**Moving Media Bio Reactor (MMBR) / FAB**			
	(Fluidised Aerated Bed) Process			
	Designing, providing, construction, hydraulic testing, commissioning and giving satisfactorily trials of STP consisting of Inlet Chamber, screen chamber, Grit Separator, MMBR / FAB (Based on technologies providing attached growth on plastic meddi kept suspended in the waste water due to low density of plastic & provided with compressed air for aeration with very high MLSS of greater than 15,000 mg/lit.) tank, Secondary Clari settler, Sludge sump, Sludge Thickener, Chlorine Contact Tank, Chlorinator room/Shed, sludge Centrifuge, associated piping work with required valves, gates, drains, pathways, Administration Block cum Laboratory, Laboratory Equipments, spares parts for 2 years of operation, etc. complete as turnkey job with all involved civil, electrical and mechanical works inclusive of following items, units as per detailed specifications for civil, electrical and mechanical components with all duties and taxes etc. complete to acheive BOD < 10 ppm, COD < 50 ppm, TSS < 10 ppm Ph between 7 to 8.5, oil and Grease < 10 ppm recyclable qaulity of water for industrial / agricultural purpose			
	FOLLOWING UNITS ARE INCLUDED			
	1. Inlet Chamber			
	Designing, providing and constructing RCC (M:25) inlet chamber designed for the peak flow including necessary excavation in all types of strata including walkway all around the periphery. Each compartment will have CI gates with extension rod. Head stock, operating wheels, GI pipe railing etc. The work includes providing and making necessary arrangements to connect the flow to screen chamber by approach channel as directed and as per specifications.			
	2. Screen Chamber			
	Designing, providing, constructing, testing and commissioning of screen chamber, designed for peak flow in RCC (M-25), including walkway 1.2 m wide with GI pipe.			

Sr No	Item Description	Unit	Rate (in Rs.)	
	3. Grit Separator			
	Designing, providing & constructing detritor type grit removal mechanism in RCC (M-25) capable of removing 100% 0.2 mm size particle & above having specific gravity 2.30 designed for peak flow with suitable arrangement of separation of grit from putrescible solids including providing & making necessary arrangements of Jb-1. Inlet & outlet channels of required sizes as make be required to connect the flow to connecting unit etc. complete including hydraulic testing for water tightness of structure having minimum FB of 0.3 m, wash out arrangement to grit chamber & platform 1.2 m wide RCC walkway with GI pipe handling shall be provided. A pit for collecting grit conveyed by conveyor shall be provided. It should be suitable to handle the grit for carting. All arrangements shall be as detailed specifications and as directed.			
	4. MMBR / FAB Tank			
	Designing, providing & constructing in RCC (M-25) biological reactor tank for removal of BOD along with nutrient removal to handle the average flow & having hydraulics suitable to handle peak flow conditions with suitable 1.2 m wide walk way, expansion joints as required, including foundation etc as per specifications. The tank shall be equipped with inlet & outlet arrangement, air blowers for supply of air, coarse bubble diffusers & aeration grid in SS 304, PP carrier bio media etc. FB of 0.5 m & SWD as required should be complete as per detailed specifications.			
	5. Secondary Clarisettler			
	Designing, providing & constructing in RCC (M-25) water tight secondary clarisettler having SWD of 3.75 m + 0.5 m FB & has tube media in the clarification zone to provide additional surface area for settling. The settler shall be provided with a scraper mechanism in MS with epoxy painting for collecting the settled solids at the bottom (bottom slope 1:12). The central feed well shall be made of MS with epoxy painting from both faces & well stiffened. The sewage will be admitted in the feed well & then will move outwards towards periphery slowly & continuously over a weir & will be collected in a launder.			

Sr No	Item Description	Unit	Rate (in Rs.)	
	6. Chlorine Contact Tank			
	Designing, providing & constructing chlorine contact tank of adequate capacity to deal with			
	average flow. The contact time provided is 30 mm to achieve 99.99 % reduction in coliform during average flow condition. Chlorine dosage will be as per standard provisions including designing, providing & constructing water supply provisi9n for chlorination, including providing dewatering & by pass arrangement for joining to final effluent mains & outlet weir etc complete. The effluent quality should match with the standards laid down by Maharashtra Pollution Control Boars & as per obligatory provision & as detailed specification & as directed by engineer in charge.			
	7. Chlorinator & Chlorinator Room / Tonner Room			
	Designing, providing & constructing vacuum type chlorinators having adequate capacity for dosage of adequate chlorine to ensure 99.99% coliform reduction as per obligatory provisions detailed specifications with necessary provision of having chlorinator room of adequate size. The chlorinator equipment shall include chlorine cylinders I tonners, piping, valves, measuring controlling equipments, safety devises, lifting equipment etc. complete as per IS 10553 (Part II) 1982. The tonner room should have mm 3 MT capacity crane for loading & unloading facility. Tonner storage should be distinctly isolated and should have min. storage space as per the detailed specifications & as per gas law 1981 & factory act shall be provided. All other matching amenities shall be provided, 5 MT gantry rail shall be provided for full length of tonner room a 6 m Ht from level of tonner room with outlet.			
	8. Sludge Sump			
	Designing, providing & constructing of sludge sump and pump for discharging sludge to sludge thickener using MS pipe complete as per detailed specification.			

Sr No	Item Description	Unit	Rate (in Rs.)	
	9. SIudge Thickener			
	Designing, providing & constructing water tight of sludge thickener - gravity type in RCC (M-25) with inlet & outlet pipes, central feed well, sludge it & sludge removal arrangement, grouting wherever necessary with walkway all around of 1.20 m with GI pipe railing interconnecting CI pipes all complete as per specifications, having bottom slope 1:8 & 3 m SWD with necessary fixed bridge scraper arrangement as per detailed specifications & necessary inlet & outlet All other arrangement as per detailed specifications.			
	10. Sludge Centrifuge Platform with Centrifuge			
	Designing, providing, constructing & installing including foundation etc. Sludge centrifuge to handle the sludge flow of 1 day in 18 hrs per unit with sludge dewatering unit drain etc complete is per specification. Sludge centrifuge with necessary arrangements as per detailed specification mentioned in tender and obligatory provisions to be provided with satisfactory functioning.			
	11. Outfall sewer			
	Designing, providing, constructing appropriate outfall sewer of RCC NP2 pipe to discharge treated effluent, untreated effluent from outlet chamber (after basin / chlorination tank) to the local Nallah at the point shown on the drawing including necessary chambers for inspection & cleaning including excavation, dewatering, refilling, concrete encasing I bedding concrete.			
	12. Pining work in CI- LA class including sluice valves, reflux valves, MS Gates			
	Providing, laying & jointing pipes other than hose already included in the above items for interconnection by pass drains etc. of all units including adequate numbers of manhole chambers. The item includes excavations, refilling & hydraulic testing of pipes, valves, gates, accessories & cost of jointing materials. The item includes required channels with gates or interconnection of units, by pass drains etc. for ill units as directed etc complete as per detailed specifications.			

Sr No	Item Description		Unit	Rate (in Rs.)	
	13. Administrative Building cum Laboratory (G+1)				
	Designing, providing & constructing administrative building, office cum laboratory including stores. This shall be building having appropriate carpet area & ground floor & at first floor complete as per specifications including necessary excavation, foundation in RCC M 20 framed structure, BB masonry (II class in CM 1:6) 20 mm cement plaster in CM 1:3 inside & outside painting, aluminum door & window with glass panels, mosaic tile flooring & skirting & all other allied items, fixtures, fastening, electrification arrangement, water supply arrangement etc complete. The building will have laboratory on upper floor of administrative building & should have complete control of every unit as per laboratory equipment, beautification, telephone & intercom arrangement & wireless system etc. complete.				
	Note : Conditions from Sr. No. **1 to 13** shall form a part and parcel of the tender and must be incorporated in draft tender papers.				
	Capacity of Plant	**Area Required**			
	01	0450	MLD	145.24	
	03	0650	MLD	85.51	
	05	1000	MLD	73.72	
	08	1500	MLD	66.94	
	10	1800	MLD	65.47	
	13	2300	MLD	59.24	
	15	2650	MLD	53.88	
	18	3250	MLD	53.16	
	20	3500	MLD	51.34	
	25	4350	MLD	49.37	
	NOTES				
	1 Screen chamber & grit separator up to 5 MLD Capacity are manual type.				
	2 Up to 5 MLD Capacity STP chlorination is done by using sodium hypochlorite solution. Above 5 MLD capacity gas chlorinator is provided.				
	3 Sludge thickener is not provided up to 3 MLD capacity STP. Sludge will be collected into sludge sump & pumped directly to sludge dewatering system				
	4 For all STP sludge dewatering is using solid bowl centrifuge.				
	5 Chlorinator room not provided for STP up to 3 MLD. For STP up to 3 MLD laboratory I administration building is not provided. Only a room for operator is provided.				
	6 Boundary wall, fencing, gate, storm water drains, site clearance is not considered in scope.				

Sr No	Item Description	Unit	Rate (in Rs.)	
	7 All water retaining structures are in M 25 grade of concrete.			
	8 Water table is considered 5 m below GL for design.			
	9 Soil bearing capacity is considered as 20 TIm2 at 1.5 m below GL.			
	10 Lead for excavation is considered as 0.5 km.			
	11 Grade of cement used is OPC 43 grade.			
	12 Grade of steel used is Fe 415.			
	13 Peak factor considered for design for plants up to 3 MLD is 3, 4 to 15 MLD is 2.5,16 to 20 MLD is 2.0.			
	14 Chemicals required during trial run & commissioning is not considered.			
	15 Water & power during construction, trial run & commissioning shall be provided by client.			
	16 Power available at STP location is assumed as LT power supply.			
	IV MAKES OF EQUIPMENT			
	S.No. Description Make			
	1 Centrifugal Pumps Kirloskar /			
	Jhonson /Kishor			
	/ Eqv.			
	2 Screw Pumps Roto/Tushaco/Eqv.			
	3 Air Blower Usha/Swam/Kay/			
	Kulkarni / Eqv.			
	4 Dosing Pumps Milton Roy/VK			
	Pumps/Positive/			
	Minimax / Eqv.			
	5 Agitators/ Pavan/Fibre&Fibre			
	Flocculators / Ceecons			
	fabricated as per			
	MJP approved			
	design / make			
	7 Screens To be fabricated as			
	per MJP approved			
	design / make			
	8 Grit Separator To be fabricated as			
	per MJP approved			
	design / make			
	9 Chlorinator Toshcon Jesco /			
	Banaco/Perfect			
	Chloro/Chlorocon-			
	trol/Metito/Eqv.			
	10 Chlorine Tonner Meenakshi / Eqv.			
	11 Solid Bowl Cent- Alfa Laval/Humbolt			
	rifuge /Wedag/Hiller/Eqv.			

Sr No	Item Description		Unit	Rate (in Rs.)	
	12 Motors	Crompton/Siemens			
		/Lakshmi			
	13 Cables	Finolex/ Polycab			
	14 MS pipes	Mahalakshmi			
		Seamless/ Mahara-			
		shtra Seamless/			
		Suryaroshni/Jindal			
		/Eqv.			
	15 CI Pipes	Truform/Electrosteel			
		/Kejriwal/Eqv.			
	16 Valves	Intervalve/BDK/			
		Procon/Tyco/AV			
		valves/Eqv.			
	17 Clarisettler	Media Cooldeck/			
		Munters			
	18 Bio Reactor	As per MJP approved			
	Carrier Media	design /make			
6	**CYCLIC ACTIVATED SLUDGE PROCESS**				
	Designing , providing, constructing, hydraulic testing, commissioning and giving satisfactory trials of Syaclic Activeted Flushe Procesess Based on SBR Technology STP consisting of Inlet Chamber, Screen Chamber, Detritus Tanks, Distribution Chamber and Biological CASP Basins, Sludge Sump, Chlorine Contact Tank, Chlorinator Room/Shed, Sludge Centrifuge necessary piping work with required valves, gates, drains, pathways administration Block cum Laboratory, Laboratory Equipments, Tools and Plants, Spare Parts, etc. complete as turnkey job with all involved civil, electrical and mechanical works inclusive of following items, units as per detailed specification for civil, electrical and mechanical components with all duties and taxes etc. complete to achieve BOD < 5 ppm, COD < 100 ppm, TSS < 10 ppm, to get recyclable quality of water for industrial / agricultural purposes. (In Case Cyclic activated sludge plant is designed for N, P outlet parameters shall also include TN < 10 ppm, Nh3N < 2 ppm and TP < 1 ppm)				

Sr No	Item Description	Unit	Rate (in Rs.)	
	UNITS INCLUDED			
	1. Inlet Chamber			
	Designing, providing, and constructing RCC (M:250) inlet chamber for the peak low of 2 DWF including necessary excavation in all types of strata including walkway all around the periphery. Each compartment will have phosphor bronze steel gates with extension rod, head stock, operating wheels. GI pipe railing etc. The work includes providing and making necessary arrangements to connect the flow to screen chamber by approach channel as directed and as per specifications.			
	2. Screen Chamber			
	Designing, providing, constructing, testing and commissioning of screen chamber, designed for average 1 DWF and maximum peak flow of 2 DWF in RCC (M -250), including inlet pipe / channel from inlet chamber, outlet pipe channel to detritus tank, free board of 0.5 m minimum, RCC walkway 1.2 m wide with GI pipe railing, RCC stair case of 1.2 m width from GL to screen chamber.			
	3. Detritus Tank			
	Designing, providing and constructing continuous grit removal type of Detritus Tank, mechanically operated in RCC (M 250) capable of removing 100% of 0.2 mm size			
	particle and above, having specific gravity 2.30 designed for one peak 2 DWF with suitable arrangement of separation of grit from putrescible solids. Inlet and outlet channels of required sizes as may be required to connect the flow to connecting unit etc. Complete including hydraulic testing for water tightness of structure having minimum FB of 0.3 m, wash out arrangement to Grit chamber and platform 1.2 m wide RCC walkway with GI pipe handling shall be provided. A pit for collecting grit conveyed by conveyor shall be provided. It should be suitable to handle the grit for carting. All arrangements shall be as detailed specifications and as directed.			

Sr No	Item Description	Unit	Rate (in Rs.)	
	4. CASP Basins			
	Designing, providing and constructing in RCC (M:250), CASP basins for biological removal of BOD along with nitrification, denitrification, Bio-P removal in compartments to handle combine flow of 1 DWF incoming flow and recirculation flow including construction of selector compartments and providing 1.2 m wide clear approach walkways, expansion joints wherever necessary, including foundations etc as per specifications. Peak factor shall be 2, F/M ration shall be 0.15, complete with air blowers, fine diffused aeration grid / equipment and FB 0.5 m and SWD as required. DO level in basin to be minimum 2 mg/l complete with "Oxygen Uptake Rate" control system and all related instruments. Stainless steel decanters and automation works. MLSS concentrations shall be 2000-5500 mg/l or more, MLVSS to MLSS ratio to be 0.8. HRT shall be between 12 to 13 hrs and SRT suitable for fully disgested sludge. It should have all other related works as per detailed specification. In Case CASP is designed to achieve N, P removal HRT			
	5. Chlorine Contact Tank			
	Designing providing and constructing chlorine contact chamber of adequate capacity to deal with 1 DWF average flow. The chlorine contact tank should be 30 min capacity, during average flow to achieve 99.99% coliform reduction. Chlorine dose shall be maintained as per standard provisions, including designing, providing and constructing water supply provision for chlorination including providing dewatering and by pass arrangement jointing to final			
	effluent mains quality should match with the standards laid down by Maharashtra water pollution control board and as per obligatory provision and as detailed specification and as			

Sr No	Item Description	Unit	Rate (in Rs.)	
	6. Chlorinator and Chlorinator Room / Tonner Room			
	Designing, providing and constructing chlorinators vacuum type 2 Nos. with auto switchover facility and having capacity for dosage of adequate chlorine to ensure 99.99% coliform reduction as per obligatory provisions and detailed specifications with necessary provision of having chlorinator room of adequate size. The chlorinator equipment shall include cost of chlorine cylinders / tonner piping, valves, measuring and controlling equipments, safety devices, lifting euipments, etc. complete as per IS-10553 (part II) 1982. The tonner room should have minimum 3 MTcapacity Hoist for loading and unloading facility. Tonner storage should be distinctly isolated and should be for minimum storage space as directed in the design specification and as per gas laws 1981 and factory act shall be provided. All other matching amenities shall be provided, 5 MT gantry rail shall be provided for full length of tonner room at 6 m height from level of tonner room, with outlet chamber and treated effluent outlet channel etc. complete.			
	7. Sludge Sump			
	Designing, providing and constructing of sludge sump and pump house of appropriate size with pumps, ceiling height minimum 6 m over sump for discharging sludge to centrifuge using CI pipe complete as per detailed specification.			
	8. Sludge Centrifuge Platform with Centrifuges			
	Designing, providing, constructing and installing including foundation etc., sludge centrifuge to handle the sludge flow of 1 day in 20 hours per unit with sludge dewatering unit drain etc complete as per specification. Sludge centrifuges with the necessary arrangement, as per detailed specification mentioned in tender and obligatory provisions to be provided with satisfactory functioning.			
	9. Outfall Sewer			
	Designing, providing and constructing appropriate outfall sewer of RCC NP2 pipe, to discharge treated effluent from outlet chamber after chlorination tank to the			

Sr No	Item Description	Unit	Rate (in Rs.)	
	local Nallah at the point shown on the drawing including necessary chamber for inspection and cleaning including necessary excavation, dewatering, refilling concrete encasing / bedding concrete steps to reach the nallah bed level, pitching and energy dissipation chamber in nallah portion etc. complete upto 50 m length RCC NP2 pipe line and including all above items.			
	10. Piping work in CI-LA Class including Sluice valves, Reflux Valves, MS gates			
	Providing laying and jointing pipes other than those already included in the above items for interconnection by - pass drains etc. of all units including adequate numbers of manhole chambers. The item includes excavations, refilling and hydraulic testing of pipes, valves, gates, accessories and cost of jointing materials. The items includes required channels with gates for interconnection of units by pass drains etc for all units as directed etc complete as per detailed specifications.			
	11. Administrative Building cum Laboratory (G+1)			
	Designing, providing and constructing administrative building, office cum laboratory including stores. This shall be a building having appropriate carpet area and ground floor and at first floor complete as per specifications including necessary excavation, foundation in RCC M 200 framed structure B. B masonry (11- class in C.M. 1:6) 20 mm cement plaster in CM 1:3 inside and outside painting. Aluminium door and window with glass panels, mosaic tile flooring and skirting and all other allied items, fixtures fastening electrification arrangement water supply arrangement etc complete. The building will have laboratory on upper floor of administrative building and should be so centralized that it should not be attached with any unit but should have complete control of every unit as per laboratory euipment, beautification, telephone and intercom arrangement and wireless system.			
	Note : Conditions from Sr. No. **1 to 11** shall form a part and parcel of the tender and must be incorporated in draft tender papers.			

Sr No	Item Description			Unit	Rate (in Rs.)	
	Capacity of the Plant in MLD	**Area required in Ha**	**No. of Basins**			
	1	0.5	2	MLD	302.42	
	2	0.6	2	MLD	202.20	
	5	0.65	2	MLD	127.04	
	10	0.70	2	MLD	103.79	
	15	0.75	2	MLD	90.06	
	20	0.80	4	MLD	85.24	
	25	1.00	4	MLD	84.63	
	30	1.20	4	MLD	79.66	
	40	1.60	4	MLD	74.68	
	50	1.75	4	MLD	73.02	
	60	1.90	4	MLD	62.53	
	75	2.25	4	MLD	61.08	
	100	2.40	6	MLD	58.17	
	125	3.00	6	MLD	55.26	
	150	3.50	6	MLD	53.81	
	NOTES					
	a. These Rates are for Civil Works, in M25 grade RCC.					
	b. Water Table is considered at 5 m below ground level.					
	c. Soil bearing capacity considered as 20 T/m² at 1.5 m below ground level.					
	d. OPC has been considered for costing purposes.					
	e. All civil items, electrical, piping, valves, pumps, motors, blowers, etc. are considered as per MJP Schedule of Rates.					
	f. I. No.1,2 includes sludge drying beds instead of sludge centrifuge and DWPE dosing system.					
	g I. No.1,2,3 includes NaOCI Dosing System instead of Gas Chlorination.					
	h. I. No.1,2,3 do not includes Lab and Lab Equipments.					
	i. O&M shall be added extra					
	j. No piling, dewatering, soil improvent, desilting considered in the cost.					
	k. Site is cleared flat and levelled. No site development works filling dewatering considered.					
	l. Peak factor considered as 2.0 times average flow. For every 25% increase in peak factor, 10% extra cost shall be added over the above rates.					
	m. OPC TOR steel considered.					
	n. Treated water disposal upto 50 m considered.					
	o. N&P reduction not considered.					
	p. HT electrical works shall be added as per case specific conditions.					
	q. Raw sewage pumping shall be added as per case specific conditions.					
	r. In case TN<10 & TP<1 quality is required, above rates shall be increased by 10%					
	s. Cost of I.No. 1 to 5 do not include HT station, Lab and Mechanical dewatering of sludge.					

Section - I- (XVIII) - R.C.C. G.S.Rs AND SUMPs					
Sr No	**Item Description**		**Unit**	**Rate (in Rs.) 2019-20**	**Labour Involved**
1	Designing (aesthetically), and constructing **RCC ground service reservoirs / RCC sumps in M-300 mix.** of required capacity including excavation in all types of strata, foundation concrete, container walls, bottom slab top RCC roof slab / or dome, 20 mm thick cement plaster with water proofing compound in CM 1:3 proportion. to inside face of the container,including epoxy paint from inside including refilling and disposing of surplus stuff within lead of 50 M, all labour and material charges, for laying and jointing of pipe assembly for inlet, outlet washout, over flow and bye-pass arrangement consisting of C.I./ M.S. D/F. pipes, specials and valves of given diameters, providing and fixing accessories such as M.S. ladder outside, **Stainless Steel Ladder in container,** C.I. Manhole frame and cover, water level indicator ,lightening conductor, G.I pipe railing around the top slab, B.B. masonry chamber for all valves, ventilating shafts, including giving satisfactory hydraulic test and water tightness test as per IS code and providing three coat of **Acrylic emulsion with silicon additives paint** to all expose surface of structure including roof surface etc. complete as per design data, criteria, obligatory requirements and detailed specifications.Anti terminite treatment shall be given for under ground portion of the structure.				
	Note :				
	1	The designing shall be in accordance with various rel evant I.S. specification (I.S. 456/2000, I.S. 875 - 1987, I.S.3370-1965 or revised.)			
	2	Only M.S. bars grade I confirming to I.S. 432 part-I or high yield strength deformed bars confirming to I.S. 1786 or I.S.1139 shall be used grade II M.S. bars shall not be used.			
	3	Entire structure shall be in M - 300 only.			
	4	The scope of pipe assembly work shall be upto 5 metre beyond outside face of the wall, cost of pipes valves and specials is not included in the rate but labour cost for laying and jointing is included.			
	5	The G.S.R. / Sump above 15 lakh litres capacity shall be in two compartment			

Sr No	Item Description		Unit	Rate (in Rs.) 2019-20	Labour Involved
	6	The job includes designing the structure for uplift pressure and dewatering if required using entire execution and disposal of surplus excavated stuff with in lead of 50 metres as directed by Engineer-in-charge. If up lifts considered in design then these rate shall be increased by 7.5%.			
	7	G.S.R. outlets shall be with bell mouth of approved partern in bottom slab and cost of designing bell mouth is included in the rate. Sump well includes cost of suction pit required at bottom.			
	8	For pipe diameters upto 300 mm only CI pipes and CI specials shall be used. For pipe diameters above 300mm, M.S. pipes and specials minimum 10 mm thick shall be used with proper anticorrosive epoxy treatment from in side and outside.			
	9	Cost of pump house is not included in these rates.			
	10	Above rates are applicable for seismic zones-2,3 and 4			
	11	75% part rate shall be payable for reinforcement,concrete and plastering items of all types of G.S.R.s. and sumps till satisfactory hydraulic testing for water tightness test is given and till that work shall be treated as incomplete			
	12	10% shall be added for sump if overhead pump house is proposed			
	Note:	**Condition from Sr. No. 1 to 11 shall form a part and parcel of tender and must be included in the Draft tender papers for work of R.C.C. GSRs and sump. Rates for R.C.C.G.S.Rs or Sumps**			
	Rates for R.C.C. G.S.Rs and Sumps				
	S.No.	**Capacity in Litres**	Unit	Rate is Rs.	Rates in Rs.
	1	Upto 25000 lit		**12.64**	**4.75**
	2	Cost of 25000 lit capacity		**316000.00**	**120920.00**
	3	Add for capacity above 25000 to 50000 lit		**7.45**	**2.87**
		Cost of 50000 lit capacity		**502286.00**	**192259.00**
	4	Add for capacity above 50000 to 75000 lit		**6.13**	**2.38**
	5	Cost of 75000 lit capacity		**655466.00**	**250866.00**

Sr No	Item Description		Unit	Rate (in Rs.) 2019-20	Labour Involved
		Add for capacity above 75000 to 100000 lit		**5.46**	**2.38**
	6	Cost of 100000 lit capacity		**792086.00**	**303109.00**
	7	Add for capacity above 100000 to 150000 lit		**5.16**	**1.98**
		Cost of 150000 lit capacity		**1050318.00**	**401931.00**
	8	Add for capacity above 150000 to 200000 lit		**4.40**	**1.68**
	9	Cost of 200000 lit capacity		**1270773.00**	**486401.00**
		Add for capacity above 200000 to 300000 lit		**4.26**	**1.68**
	10	Cost of 300000 lit capacity		**1696158.00**	**649280.00**
	11	Add for capacity above 300000 to 500000 lit		**3.30**	**1.29**
	12	Cost of 500000 lit capacity		**2356488.00**	**902296.00**
	13	Add for capacity above 500000 to 1000000 lit		**3.05**	**1.19**
		Cost of 1000000 lit capacity		**38779938.00**	**1484302.00**
	14	Add for capacity above 1000000 to 1500000 lit		**2.44**	**0.99**
	15	Cost of 1500000 lit capacity		**5094063.00**	**1949141.00**
		Add for capacity above 1500000		**1.82**	**0.69**

Sr No	Item Description		Unit	Rate (in Rs.) 2019-20	
	Designing (aesthetically), and constructing **RCC elevated service reservoirs** of following capacity with RCC staging consisting of columns, internal and external bracings spaced vertically not more than 4.5 meters centre to centre for ESR having Capacity upto 500 Cum. and not more than 6 m c/c for ESRs having capacity above 500 cum including excavation in all types of strata, foundation concrete, cement plaster with water proofing compound to the inside face of the container including refilling disposing of the surplus stuff within a lead of 50 meters, all labour and material charges including lowering, laying, erecting, hoisting and jointing of pipe assembly of inlet, outlet, washout, overflow and bypass arrangements as per departmental design, providing and fixing accessories such as **M.S. ladder out side with both side G.I pipe railing, stainless steel Ladder in container,** C. I. manhole frame and covers water level indicatiors, lightening conductor, G. I. pipe railing around walk way and top slab, providing spiral staire case from ground level to roof level,M.S.grill gate of 2 mtr.height with locking arrangement of approved design. B.B. masonry chambers for all valves, ventilating shafts, providing and applying three coats of **Acrylie emulsion with silicon additives paint** to the structure including roof slab epoxy painting to internal surface & anti termite treatment for underground parts of the structure. and giving satisfactory water tightness test as per I.S. code, The job to include painting the name of the scheme and other details on the reservoir as per the directions of Engineer-in-charge.				
	1	The design of the structure be in accordance with relevent (I.S.3370 - 2009 or revised)			
	2	The design shall satisfy the stipulation as per IS 1893-1984 and I.S. 13920/1993 for seismic focrce and I.S.- 11682/1985 for R.C.C. staging of overhead tanks.			
	3	For design having more than 6 columns, Providing of internal bracing is obligatory,. External bracking is also obligatory.			

Sr No	Item Description		Unit	Rate (in Rs.) 2019-20	
	4	The entire structure shall be in M/250 mix only. However concrete in contact with water such as container, base slab, wall, roof slab & footing in water borne area shall be in M-300			
	5	Plain round mild steel bars grade - I confirming to I.S:432 Part-I or high yield strengh deformed bars confirming to I.S. 1786 or I.S. 1139 shall be used, grade-II mild steel bars will not be allowed.			
	6	Irrespective of the type of foundation proposed in the design, one set of bracing be provided at the gound level.			
	7	These rates include providing, M.S. ladder for E.S.R's upto 2 lakhs liters capacity and providing sprial staircase for E.S.R. above 2 lakhs liters capacity.			
	8	Stagging shall have to be designed with stresses of M-200 for ESR. However all RCC construction should be done in M-250 except concrete in contact with water shall be designed & constructed in M-300			
	9	These rates are including the cost of uplift pressure if any and entire dewatering during execution. In case of water logging area where water is struck at shallow depth extra provision of dewatering shall be made as per site condition.			
	10	All condition given in the Member Secretary"s Circular No.MJP/TS-I/350/1668 dt. 2.8.97 and MJP/S-I/350/2127 dt. 13.7.99 shall be strictly followed and additional cost, if any due to these conditions is included in the rates			
		mentioned below.			
	11	75% part rate shall be payable for reinforced cocnrete and plastering items of containers of E.S.R. till satisfactory hydraulic testing for water tightness is given ; and till that work shall be treated as incomplete.			

Sr No		Item Description	Unit	Rate (in Rs.) 2019-20	
	12	The rates indicated in the table are excluding the cost of pipes, specials and valves required for inlet, outlet washout overflow and by-pass arrangement. The scope of work, however inclueds cost of erecting, laying and jointing of pipes and valvews including cost of jointing materials upto 5M beyond outer face of outermost column.			
	13	For ESR upto 500cum capacity C.I.D. double flanged pipes upto 300mm dia shall be provided and C.I.Specials shall be used.For ESR above 500 cum capacity C.I./M.S. pipes assembly with minimum 8mm thick ness up to 500mm dia. And minimum 10mm thickness above 500mm dia can be used with proper anti-corrosive epoxy teratment from inside and outside.			
	14	Below mentioned rates are for foundation, with individuals footing with bearing capacity of 30 tonnes per square metre. For raft foundations, these rates shall be increased by 7.5% wheresafebearing capacity (SBC) is 5 M.T. per Sq.m and by 5% where SBC is more than 5 MT/Sqm. and upto 10MT/Sq.m. This percentage of 5% or 7,5% is applicable for estimation of amount of L.S. items ESR for Extra item due to change from individual footing foundation to raft actual increase in concrete and steel quantities be paid as per relevent DSR Item.			
	15	The rates shall be increase by 30% for brearing piles upto depth of 10m and for further increased in depth by 5M each it shall be increased by another 10% These rates are applicable where raft is not reasible for pile foundation sulfate resistant cement shall only be used. Single pile for the column is not permitted Group of piles shall be designed with pile cap for each column of ESR.			

Sr No	Item Description		Unit	Rate (in Rs.) 2019-20	
	16	These rates are applicable for staging height of 12 M These rates shall be increased or decreased for per metre variation in the staging height as below			
		12 to 16 M staging 2% per metre			
		16 to 20m staging 3% per meter			
		20 M and abovd 4% per metre			
		i.e. for 17m stagging height			
		percentage calculation will be like below			
		12 to16m = 4 x 2 = 8%			
		16 to 17 m x 1 x 3 = 3%			
		Total = 11 %			
		For 21 m stagging height			
		Percentage calculation will be like below			
		12 to 16m = 4 x 2 = 8%			
		16 to 20m = 4 x 3 = 12%			
		20 to 21m = 1 x 4 = 4%			
		Total = 24%			
	17	Following rates are for seismic zone-III for Zone-IV these rates shall be increased by 5% and for Zone-II, these rates shall be decreased by 5% concerned Executive Engineer shall confirm the seismic zone for the scheme from seismic zones plan before estimation and adopt appropriate rates as per actual seismic zones(Seismic maps attached in this C.S.R.)			
		Note:			
		1) Conditin from Sr.No.1 to 11 shall form a part and parcel of the tender papers and shall be included in the DTP for works of R.C.C.E.S.R.			
		2) Condition from Sr.No.12 to 17 are for estimation purpose only and shall not be appear in the tender.			

S.No.	Capacity in Litres	Unit	for Seismic Zone-III Rate in Lakh Rs.	LABOUR Involved
1	Upto 25000 lit	Litre	**27.40**	**7.22**
2	Cost of 25000 lit capacity	Job	**685000.00**	**180501.00**
3	Add for capacity above 25000 to 50000 lit	Litre	**12.16**	**3.17**
4	Cost of 50000 lit capacity	Job	**988839.00**	**260616.00**

Sr No	Item Description	Unit	Rate (in Rs.) 2019-20	
S.No.	**Capacity in Litres**	**Unit**	**for Seismic Zone-III Rate in Lakh Rs.**	**LABOUR Involved**
5	Add for capacity above 50000 to 75000 lit	Litre	**8.49**	**2.23**
6	Cost of 75000 lit capacity	Job	**1201152.00**	**316157.00**
7	Add for capacity above 75000 to 100000 lit	Litre	**8.49**	**2.45**
8	Cost of 100000 lit capacity	Job	**1413465.00**	**5408964.00**
9	Add for capacity above 100000 to 150000 lit	Litre	**6.50**	**2.55**
10	Cost of 150000 lit capacity	Job	**1738386.00**	**665304.00**
11	Add for capacity above 150000 to 200000 lit	Litre	**6.50**	**2.52**
12	Cost of 200000 lit capacity	Job	**2063307.00**	**789533.00**
13	Add for capacity above 200000 to 250000 lit	Litre	**6.50**	**2.53**
14	Cost of 250000 lit capacity	Job	**2191508.00**	**876785.00**
15	Add for capacity above 250000 to 300000 lit	Litre	**4.52**	**1.69**
16	Cost of 300000 lit capacity	Job	**2614031.00**	**1000244.00**
17	Add for capacity above 300000 to 400000 lit	Litre	**4.52**	**1.71**
18	Cost of 400000 lit capacity	Job	**3065636.00**	**1173123.00**
19	Add for capacity above 400000 to 500000 lit	Litre	**4.51**	**1.71**
20	Cost of 500000 lit capacity	Job	**3517241.00**	**13457268.00**
21	Add for capacity above 500000 to 750000 lit	Litre	**4.51**	**1.73**
22	Cost of 750000 lit capacity	Job	**4646253.00**	**1777604.00**
23	Add for capacity above 750000 to 1000000 lit	Litre	**3.82**	**1.46**
24	Cost of 1000000 lit capacity	Job	**5601075.00**	**2143269.00**
25	Add for capacity above 1000000 to 1500000 lit	Litre	**3.82**	**1.39**
26	Cost of 1500000 lit capacity	Job	**7510075.00**	**2873054.00**
27	Add for capacity above 1500000 to 2000000 lit	Litre	**3.82**	**1.40**
28	Cost of 2000000 lit capacity	Job	**9419075.00**	**3603727.00**

Section -I (XX)- CHAMBERS, MANHOLES and DRAINAGE DROPS

Sr No	Item Description	Unit	Rate (in Rs.) 2019-20	LABOUR INVOLVED
1	Providing and constructing **B.B. masonry valve chamber** with 15 cm thick 1:3:6 proportion PCC bedding, excluding excavation, B.B. masonry in C.M. 1:5 Proportion **precast RCC frame and cover**, etc. complete as directed by Engineer-in-charge.			
	Note:			
	Wall thickness : 0.23 M for depth of 1.2 M and 0.35 M for balance depth exceeding 1.2 M)			
A.	As above of **60 x 45 cm** internal size and depth upto 0.9M .	No	**5816.00**	**1461.00**
	a). Add for every increase of depth of 30cm or part thereof.	30cm depth	**1265.00**	**348.00**
B.	As above of **95 x 45 cm** internal size and depth upto 1.2M .	No	**8606.00**	**2196.00**
	a). Add for every increase of depth of 30cm or part thereof.	30cm depth	**1513.00**	**418.00**
C.	As above of **90 x 60 cm** internal size and depth upto 1.2M .	No	**9356.00**	**2401.00**
	a). Add for every increase of depth of 30cm or part thereof.	30cm depth	**1636.00**	**455.00**
D.	As above of **90 x 90 cm** internal size and depth upto 1.2M .	No	**10179.00**	**2618.00**
	a). Add for every increase of depth of 30cm or part thereof.	30cm depth	**1802.00**	**508.00**
E.	As above of **1.2 x 1.2 M** internal size and depth upto 1.2 M .	No	**13102.00**	**3372.00**
	a). Add for every increase of depth of 30cm or part thereof.	30cm depth	**2143.00**	**602.00**
F.	As above of **1.5 x 1.5 M** internal size and depth upto 1.5 M .	No	**15007.00**	**3862.00**
	a). Add for every increase of depth of 30cm or part thereof.	30cm depth	**2397.00**	**690.00**
G.	As above of **90 cm** internal dia size and depth upto 1.2 M .	No	**11451.00**	**3016.00**
	a). Add for every increase of depth of 30cm or part thereof.	30cm depth	**2013.00**	**587.00**

Sr No	Item Description	Unit	Rate (in Rs.) 2019-20	LABOUR INVOLVED
2	Providing and constructing **B.B. masonry valve chamber** with 15 cm thick 1:3:6 proportion PCC bedding, excluding excavation, B.B. masonry in C.M. 1:5 proportion 12 mm thick cement plaster in cm 1:4 proportion on both sides with providing and fixing **C.I. manhole frame and cover** in RCC 1:2:4 coping or RCC 1:2:4 proportion 15 cm thick slab, etc.complete as directed by Engineer-in-charge.			
	Note:			
	Wall thickness : 0.23 M for depth of 1.2 M and 0.35 M for balance depth exceeding 1.2 M			
	Valve Chamber with Cast iron frame & covers.			
A.	As above of **60 x 45 cm** internal size and depth upto 0.9 M with 60 x 45 cm size CI manhole frame and cover of 40 kg	No	**9074.00**	**1377.00**
	a). Add for every increase in depth of 30cm or part thereof	30cm depth	**1265.00**	**347.00**
B.	As above of **90 x 45 cm** internal size and depth upto 1.2 M with 90 x 45 cm size CI manhole frame and cover of 40 kg	No	**11814.00**	**2072.00**
	a). Add for every increase in depth of 30cm or part thereof	30cm depth	**1444.00**	**397.00**
C.	As above of **90 x 60 cm** internal size and depth upto 1.2 M with 90 x 60 cm size CI manhole frame and cover of 50 kg	No	**13476.00**	**2273.00**
	a). Add for every increase in depth of 30cm or part thereof	30cm depth	**1565.00**	**433.00**
D.	As above of **90 x 90 cm** internal size and depth upto 1.2 M with 53 cm dia CI manhole frame and cover of 90 kg fixed in R.C.C. Slab	No	**18662.00**	**2695.00**
	a). Add for every increase in depth of 30cm or part thereof	30cm depth	**1888.00**	**530.00**
E.	As above of **1.2 x 1.2 M** internal size and depth upto 1.2 M with 53 cm dia CI manhole frame and cover of 90 kg fixed in R.C.C. Slab	No	**21856.00**	**3546.00**
	a). Add for every increase in depth of 30cm or part thereof	30cm depth	**2396.00**	**688.00**
F.	As above of **1.5 x 1.5 M** internal size and depth upto 1.5 M with 53 cm dia CI manhole frame and cover of 90 kg fixed in R.C.C. Slab	No	**28203.00**	**5334.00**
	a). Add for every increase in depth of 30cm or part thereof	30cm depth	**2899.00**	**844.00**

Sr No	Item Description	Unit	Rate (in Rs.) 2019-20	LABOUR INVOLVED
3	Providing and constructing **B.B. masonry valve chamber** with 15 cm thick 1:3:6 proportion PCC bedding, excluding excavation, B.B. masonry in C.M. 1:5 Proportion precast **S. F. R. C.frame and cover**,etc.complete as directed by Engineer-in-charge.			
	Note:			
	Wall thickness : 0.23 M for depth of 1.2 M and 0.35 M for balance depth exceeding 1.2 M			
	Valve Chamber with Precast steel fibre reinforced concrete (S.F.R.C.) frame & covers.			
A.	As above of **60 x 45 cm** internal size and depth upto 0.9 M .	No	**8397.00**	**1553.00**
	a). Add for every increase in depth of 30cm or part thereof	30cm depth	**1271.00**	**234.00**
B.	As above of **90 x 45 cm** internal size and depth upto 1.2 M .	No	**12101.00**	**2239.00**
	a). Add for every increase in depth of 30cm or part thereof	30cm depth	**1450.00**	**268.00**
C.	As above of **90 x 60 cm** internal size and depth upto 1.2 M .	No	**13321.00**	**2465.00**
	a). Add for every increase in depth of 30cm or part thereof	30cm depth	**1572.00**	**290.00**
D.	As above of **90 x 90 cm** internal size and depth upto 1.2 M .	No	**15666.00**	**2899.00**
	a). Add for every increase in depth of 30cm or part thereof	30cm depth	**1815.00**	**3355.00**
E.	As above of **1.2 x 1.2 M** internal size and depth upto 1.2 M with S.F.R.C. frame and cover of size 540 mm dia fixed in R.C.C. Slab	No	**19421.00**	**3594.00**
	a). Add for every increase in depth of 30cm or part thereof	30cm depth	**2408.00**	**446.00**
F.	As above of **1.5 x 1.5 M** internal size and depth upto 1.2 M with S.F.R.C. frame and cover of size 540 mm dia fixed in R.C.C. Slab	No	**26047.00**	**4818.00**
	a). Add for every increase in depth of 30cm or part thereof	30cm depth	**2912.00**	**539.00**

Sr No	Item Description	Unit	Rate (in Rs.) 2019-20	LABOUR INVOLVED
4	Providing and fixing in position **M.S. Air valve boxes** fabricated with 2 mm thick M.S. plate, 30 x 30 x3 mm size M.S. angle frame, concre- ting in M-150 for fixing the box in position,applying two coats of oil paint, painting chainage, locking arrangement, etc. complete as directed by Engineer-in-charge.			
a)	For **single ball** air valve	No	**2185.00**	**84.00**
b)	For **Double ball** air valve	No	**3062.00**	**2178.00**
5	Providing and fixing **C.I. road surface box** including loading, unloading and carting to site of work including all necessary excavation in all types of strata and fixing in murum packing, etc. complete.			
a)	100 mm x 225 mm (20 kg)	No	**1572.00**	**292.00**
b)	225 mm x 300 mm (40 kg)	No	**3144.00**	**582.00**
6	Providing and constructing on sewer, **B.B. masonry circular manhole** concentric cone **1.2 M dia. at bottom** and 0.5 M dia. at top and upto a **depth of 2.00 M** with 23 cm brick work in CM 1:4 proportion excluding excavation including foundation concrete 250 mm thick and haunches and channels in c.c.1:2:4 proportion, finishing channels in smooth rendering, providing C.I. dapuri type steps each weighing 5.5 kg., 1:2:4 coping and providing and fixing approved make and quality S.F.R.C. frame and cover of 56 cm.dia. etc. complete as directed by Engineer-in-charge.	No	**22847.00**	**3908.00**
	a) Rebate for every decrease in depth of 50 cm or part thereof	50cm depth	**3039.00**	**1458.00**
7	Providing and constructing on sewer, **B.B. masonry circular manhole concentric cone 1.5 M dia. at bottom and 0.5 M dia. at top and upto a depth of 5.00 M** with 23 cm brick work up to depth of 2 M from top and 35 cm thick brick work for balance depth in CM 1:4 proportion with 20 mm thick smooth plaster on both side in cm 1:2 proportion excluding excavation including foundation concrete 250 mm thick and haunches and channels in c.c.1:2:4 proportion, finishing channels in smooth rendering, providing C.I. dapuri type steps each weighting 5.5 kg., 1:2:4 coping and providing and fixing approved make			

Sr No	Item Description	Unit	Rate (in Rs.) 2019-20	LABOUR INVOLVED
	and quality S.F.R.C. frame and cover of 56 cm.dia. etc. complete as directed by Engineer-in-charge.	No	**62523.00**	**3908.00**
	a) Rebate for every decrease in depth of 50 cm or part thereof	50cm depth	**6069.00**	**4058.00**
8	Providing and constructing on sewer, **B.B. masonry circular manhole** with concentric cone **1.5 M dia. at bottom** and 0.5 M dia. at top and upto a **depth of 9.00 M** with 23 cm brick work, upto depth of 2 M from top and 35 cm thick brick work for depth of 2 M and 45 cm thick brick work for remaining depth upto 9 M in CM 1:4 proporpion with 20 mm thick smooth plaster on both sides in CM 1:2 proportion excluding excavation, including foundation concrete 250 mm thick and haunches and channels in c.c.1:2:4 proportion, finishing channels in smooth rendering, providing C.I. dapuri type steps each weighing 5.5 kg., 1:2:4 coping and providing and fixing approved make and quality S.F.R.C. frame and cover of 56 cm.dia. etc. complete as directed by Engineer-in-charge.	No	**130966.00**	**3889.00**
	a) Rebate for every decrease in depth of 50 cm or part thereof	50cm depth	**7537.00**	**5311.00**
9	Providing and constructing **B.B. masonry circular manhole** without conical shape excluding			
	excavation, RCC 1:2:4 proportion, 20 cm bedding brick masonry in CM 1:4 proportion,23 cm thick for 2 M depth from top 35 cm thick for 2 M below it and 45 cm thick for balance depth, RCC slab at top and at 2 M depth from top for supporting brick masonry above it, plastering with smooth finish in CM 1:2 proportion C.C.1:2:4 finishing channels in smooth rendering, providing C.I. dapuri type steps each weighing 5.5 kg., providing and fixing S.F.R.C. frame and cover of 56 cm.dia. at top including cost of all materials and labour, etc.complete.			
A.	1.00 M dia x 2 M Depth	No	**20930.00**	**3534.00**
	a). Rebate for every decrease in depth of 50 cm or part thereof	50cm depth	**3069.00**	**718.00**
B.	1.00 M dia x 3 M Depth	No	**30084.00**	**5636.00**

Sr No	Item Description	Unit	Rate (in Rs.) 2019-20	LABOUR INVOLVED
	a). Rebate for every decrease in depth of 50 cm or part thereof	50cm depth	**4287.00**	**948.00**
C.	1.00 M dia x 4.5 M Depth	No	**45607.00**	**9231.00**
	a). Rebate for every decrease in depth of 50 cm or part thereof	50cm depth	**5306.00**	**1180.00**
D.	1.50 M dia x 2 M Depth	No	**31227.00**	**5470.00**
	a). Rebate for every decrease in depth of 50 cm or part thereof	50cm depth	**3677.00**	**942.00**
E.	1.50 M dia x 3 M Depth	No	**39929.00**	**8021.00**
	a). Rebate for every decrease in depth of 50 cm or part thereof	50cm depth	**5502.00**	**1307.00**
F.	1.50 M dia x 4.5 M Depth	No	**59688.00**	**12859.00**
	a). Rebate for every decrease in depth of 50 cm or part thereof	50cm depth	**6800.00**	**1601.00**
	Drainage Drops			
10	Providing 150 mm dia S.W. or R.C.C.pipes in **vertical drop arrangement** including providing 150 mm dia S.W.and R.C.C. pipe fixed in B.B. masonry of manhole at the required level including providing 150 mm dia double tee, 150 mm dia right angled bend, encasing in B.B. masonry 1:4 proportion all around the pipe,double tee, bend			
	upto the foundation of manhole, jointing, cutting, filleting including neat cement rendering, plugging the opening with jungle wood knob complete as directed by Engineer-in-charge (0.60M depth) excluding cost of chamber.	No	**1951.00**	**365.00**
	a). Extra for every 0.5 M depth beyond initial depth of o.60 M	50cm depth	**806.00**	**110.00**
11	As above but for 200 mm dia. Pipes & depth 0.60 M	No	**2478.00**	**451.00**
	a). Extra for every 0.5 M depth beyond initial depth of o.60 M	50cm depth	**919.00**	**128.00**
12	As above but for 250 mm dia. Pipes & depth 0.60 M	No	**2946.00**	**549.00**
	a). Extra for every 0.5 M depth beyond initial depth of o.60 M	50cm depth	**979.00**	**138.00**
13	As above but for 300 mm dia. Pipes & depth 0.60 M	No	**3632.00**	**660.00**

Sr No	Item Description	Unit	Rate (in Rs.) 2019-20	LABOUR INVOLVED
	a). Extra for every 0.5 M depth beyond initial depth of o.60 M	50cm depth	**1060.00**	**132.00**
14	As above but for 400 mm dia. Pipes & depth 0.60 M	No	**5249.00**	**910.00**
	a). Extra for every 0.5 M depth beyond initial depth of o.60 M	50cm depth	**1503.00**	**170.00**
15	As above but for 500 mm dia. Pipes & depth 0.60 M	No	**6417.00**	**1093.00**
	a). Extra for every 0.5 M depth beyond initial depth of o.60 M	50cm depth	**1806.00**	**188.00**
16	As above but for 600 mm dia. Pipes & depth 0.60 M	No	**8552.00**	**1466.00**
	a). Extra for every 0.5 M depth beyond initial depth of o.60 M	50cm depth	**2430.00**	**230.00**
17	Providing and fixing in position **steel fibre reinforced concrete (S.F.R.C.) frame and covers** of approved make including loading, unloading, transportation, all taxes, etc. complete as directed by Engineer-in-charge (20 tonnes capacity)			
a)	540 mm dia	No	**3012.00**	**558.00**
b)	560 mm dia	No	**4294.00**	**794.00**
c)	90 x 45 cm size	No	**3012.00**	**558.00**
d)	90 x 60 cm size	No	**3264.00**	**604.00**
e)	60 x 60 cm size	No	**2981.00**	**551.00**
f)	60 x 45 cm size	No	**2583.00**	**477.00**
18	Providing and fixing intercepting **sewer trap** including concrete bedding, etc. complete.			
a)	150 x 100 mm	No	**493.00**	**49.50**
b)	100 x 100 mm	No	**356.00**	**33.00**
19	Providing and fixing in position **S.W. bends** of various size,etc. complete.			
a)	100 mm	No	**158.00**	**13.00**
b)	150 mm	No	**188.00**	**15.00**
20	Providing and fixing **'Y' junction** and labour, etc. complete.			
a)	Saddle junction 100 x 100 mm	No	**174.00**	**14.00**
b)	"Y" junction 150 x 150 x 100 mm	No	**209.00**	**19.00**
c)	"Y" junction 300 x 300 x 300 mm	No	**248.00**	**22.00**
d)	"Y" junction 300 x 300 x 100 mm	No	**209.00**	**19.00**

Sr No	Item Description	Unit	Rate (in Rs.) 2019-20	LABOUR INVOLVED
21	Providing and fixing in position **A.C. soil ventilators / slotted** as necessary and as directed by Engimeer-in-charge etc. complete.			
a)	80 mm	No	**174.00**	**14.00**
b)	100 mm	No	**209.00**	**17.00**
c)	150 mm	No	**297.00**	**24.00**
22	Providing and fixing **A.C. soil pipe** or downtake pipe with all required fittings, taking hole, etc. complete (as per manufacturer's code of practice).			
a)	80 mm	No	**298.00**	**24.00**
b)	100 mm	No	**362.00**	**29.00**
c)	150 mm	No	**543.00**	**44.00**
23	Providing and fixing **Cast Iron soil pipe** of 1.8 M length including taking out holes and all required fittings, etc. complete.			
	S / S			
a)	80 mm	No	**1024.00**	**81.00**
b)	100 mm	No	**1174.00**	**94.00**
	D / S			
a)	80 mm	No	**1113.00**	**89.00**
b)	100 mm	No	**1285.00**	**102.00**

Section -J - WELL SINKING AND RIVER INFILTRATION WORKS				
Sr No	**Item Description**	**Unit**	**Rate (in Rs.) 2019-20**	**LABOUR INVOLVED**
1	Providing, constructing **coffer dam in river basin / dam storages** as per type design including excavation, filling, the middle portion with B. C. soil (in gunny bags if requried). Providing impervious / semipervious materials on both side of B.C. soil (in gunny bags if required) including ramming, compacting to the satisfaction of Engineer-in-charge, till the complection of work including dismantling coffer dam after completion of works and disposing off the material as directed by the Engineer-in-charge.	Cum	**694.00**	**31.00**
	Note : Pay line maximum- Top width payable shall be 2 mtr. And maximum payable side slopes shall be 1.5 Horizontal to 1 vertical, if the constructed top width of the side slopes are less, then the measurements at actual are payable. Extra top width or flatter slopes are not payabale Contractor is free to use ballies, plastic sheets, piles, pipes, CGI sheets for supporting hearting materials instead of impervious/semipervious hearting materials for which no extra payments shall be payable. 30% payment shall be withheld for dismantling of coffer dam. This foot note shall appear in tender condition. (type section is shown on last page of type design section of CSR)			
2	Providing and fabricating at work shop, carting to site of work, including transport, loading, unloading, hoisting, lowering and setting out at actual site of well, sinking **M.S. plate cutting edge.** for R.C.C. well curb consisting of 350 mm M.S. plate, 10 mm thick, champhering at bottom. Cutting edge should be provided in pieces not less than 2 M in length. Each joint should be plain from outside and jointed by gusset plate 400 x 200 x 12 mm thick M. S. plate with 12 nos. of 20 mm dia. crurshank headed bolts (gusset plates from inside) with unequal angle of 90 x 60 x 10 mm should be welded from top of chamfered portion at 14 mm from bottom so that 15mm side should be in contact with cutting edge with overlap of 300 mm joints. 16 mm dia bar should be welded to M.S. plate 200 mm below the top surface and length should be 1.8 M above plate with a bend 300 mm from plate surface including 3 coats of anticorrosive paint as directed by Engineer-in-chage.	Kg	**86.00**	**21.00**

Sr No	Item Description	Unit	Rate (in Rs.) 2019-20	LABOUR INVOLVED
3	Providing and filling **puddle (selected good impervious clay)** in Kolhapur type weirs in proper layers of 15 cm including watering, ramming and compaction, etc. complete with all leads and lifts.	Cum	**278.00**	**121.00**
4	Providing and filling around the well **boulders filling** of selected variety and size of boulders including cost of all materials, labour, transportation, etc. complete with all leads and lifts.	Cum	**876.00**	**195.00**
5	Providing, and fixing 80 mm dia **A.C./P.V.C. pipe weep holes** at 1.5 M c/c staggered including cost of all materials and labour involved with all leads and lifts.etc. complete with all leads and lifts.	Rmt	**193.00**	**38.00**
6	Providing and fixing **M.S. chaquerred plate** flooring of following thickness supported on M.S.angles (25 x 25 x 5 mm size) including welding, cutting and fabricating the plate to the required square or rounding shape, making holes in the plate, including providing and applying 3 coats of anticorrosive paint, etc. complete as directed by Engineer-in-charge.			
	a) 6 mm thick	Sqm	**3706.00**	**545.00**
	b) 8 mm thick	Sqm	**4698.00**	**547.00**
7	Providing at site of works ISI standard **RCC slotted pipes of NP-3 class** including cost of all central and local taxes, octroi, inspection, transportation, etc. complete including cost of RCC collar, etc. complete.			
	450 mm dia	RMT	**3848.00**	
	600 mm dia	RMT	**5985.00**	
8	Lowering, laying and jointing **RCC slotted pipes** of following diameters including all leads and lifts, cost of jointing material, labour, etc. complete as directed by Engineer-in-charge.			
	450 mm dia	RMT	**216.00**	**141.00**
	600 mm dia	RMT	**287.00**	**183.00**
9	Lowering, laying and jointing **CI 'B' class/DI connecting mains** with rubber gaskets including transportation of pipes from stores to site of works, cost of jointing materials, cost of rubber gasket with all leads and lifts, etc. complete.			
	300 mm dia	RMT	**296.00**	**268.00**

Sr No	Item Description	Unit	Rate (in Rs.) 2019-20	LABOUR INVOLVED
	Item No 9 Contd.			
	350 mm dia	RMT	**361.00**	**325.00**
	400 mm dia	RMT	**427.00**	**403.00**
	450 mm dia	RMT	**439.00**	**405.00**
	500 mm dia	RMT	**494.00**	**481.00**
	600 mm dia	RMT	**689.00**	**678.00**
	700 mm dia	RMT	**903.00**	**856.00**
	750 mm dia	RMT	**1023.00**	**990.00**
10	Providing, lowering, laying and placing in position, **shrouding material for porous pipe gallery / slotted pipe gallery/ trench gallery** with all leads and lifts involved including transportation of materials to site of works, screening and washing of materials and placing in position with given section, etc. complete as directed by Engineer-in-charge.			
	40 mm pebbles	Cum	**1493.00**	**229.00**
	12 mm to 20 mm pebbles	Cum	**1807.00**	**261.00**
	6 mm to 12 mm pebbles	Cum	**2059.00**	**297.00**
	Fine Sand (from river sand at site)	Cum	**1000.00**	**147.00**
11	Providing and fixing in position **C.I. Type dapuri steps** of 22 mm dia. M.S. bar step with proper anchorage, etc. and providing and applying 3 coats of ant-corrosive paint, etc complete as directed by Engineer-in-charge.	No	**454.00**	**63.00**
12	Providing and fixing **M.S. sluice gates** in position as per detailed drawing and specification including cost of all materials, labour, operating pedestal, connecting rod, painting with three coats of anti-corrosive paint, etc. complete as directed by Engineer-in-charge.	Kg	**106.00**	**30.00**
13	Providing and fixing in position **C.I. /M.S. rose pieces** in intake wells including cost of all materials and labour, painting with three coats of anti-corrosive oil paint, etc.complete as directed by Engineer-in-charge.	Kg	**79.00**	**13.00**
14	Providing and spreading around the well 1 mm thick **polyethylene sheet** complete as directed by Engineer-in-charge.	Sqm	**24.00**	**3.00**
15	**Dewatering** charges for estimation purpose for head works in river basin or dam			

Sr No	Item Description	Unit	Rate (in Rs.) 2019-20	LABOUR INVOLVED
	Item No 15 Contd.			
	Approach channel	RMT	**5723.00**	**744.00**
	Intake well of 3 M dia	No	**76330.00**	**9913.00**
	Inspection well of 2 M dia	No	**49149.00**	**7462.00**
	Connecting main	RMT	**4587.00**	**713.00**
	Jack well of 6 M dia	No	**228977.00**	**23066.00**
	Approach Bridge	RMT	**771.00**	**141.00**
	Notes			
i	The Contractor at his request may be allowed to start construction of masonry steining so as not to allow silting of well inoncoming monsoon and while paying masonry, 25% amount shall be withheld and released only when excavation to the full depth is completed.			
ii	Dewatering: Total dewatering charges are to be proposed in the tender as lumpsum amount and 75% is payable for excavation and 25% is payable for construction of well / gallery. Out of 75% excavation, break-up shall be as under:			
	25% for last 1 M depth.			
	20%for2Mdepthwhichjustabovelast1M depth.			
	15%for2Mdepthwhichjustabovelast3M depth.			
	15%fortherestofdepthfromwatertablelevel.			
iii	The provisions made for dewatering in the tender being on lumpsum basis, the same shall have to be reduced / increased proportionately as the length of approach channel, connecting main or approach bridge reduces / increases during actual execution.			
	Condition No. i and ii shall appear in Tender condition			
16	Carrying out **recuparation / Yield test** for ascertaining the discharge of constructed well / excavated profile as directed by Engineer - In - Charge. The test carried out by drawing down water from the well / profile below normal / subsoil water level upto full depth rise is recorded. The normal water level / subsoil water level / subsoil water level in the well / profile as well as strainer / suction level at pump as per design of W.S. Scheme shall be recorded prior to the test including cost of all materials, overload, labours etc. complete as directed.			
	The test shall be carried out as per technical circular No. 2597 dt. 20.11.1997 and shall be carried out for 7 days.			
	a) Lps more than 25000	Day	**2591.00**	**1599.00**
	b) Lps less than 25000	Day	**1865.00**	**1209.00**

Sr No	Item Description	Unit	Rate (in Rs.) 2019-20	LABOUR INVOLVED
17	Providing and laying **HDPE Geo-membrane sheet** of following thickness 100% acid, alkali proof, 100% rain forced sealing quality, every joints electronically welded, as per relevant IS specification & placing in proper position on prepared bed on foundation/ embankment with welding the joints of sheet using hot sedge and extrusion welding techniques according to the liner manufacturers specifications at ambient temperaturs of 5^0 C to 45^0 C including all taxes & labour for jointing and placing etc. complete.			
	500 micron	Sqm	**259.00**	
	250 micron	Sqm	**179.00**	

Section -K - ANCILLARY ITEMS FOR RESERVOIRS

Sr No	Item Description	Unit	Rate (in Rs.) 2019-20	LABOUR INVOLVED
1	Providing and fixing in position **copper lightening conductor** including copper rod of 20 mm dia as per upper terminal 1.5 M long with a knob at end and with conical spike at top, **copper tape conductor** 20 x 3 mm size, copper earth plate of 3 mm thick and 0.81 sqm. in area, clamps at 1 M centre to centre including, necessary excavation, laying and fixing the conductor, providing and fixing 40 mm G.I pipe upto 3 M height from ground and 0.5 M below ground including making all connections, filling the earthing pit with charcoal, salt, etc. and refilling and watering, etc. complete as per specifications laid down in relevent I.S. codes.			
i)	For Tape of 10M length	No	**11250.00**	**1000.00**
ii)	Rebate / Extra rate per metre length or part thereof over and above initial length of 10M	Mtr	**294.00**	**11.00**
2	Providing and fixing in position **copper lightening conductor** including copper rod of 20 mm dia as per upper terminal 1.5M long with a knob at end and with conical spike at top, **aluminium tape conductor** 20 x 3 mm size copper earth plate of 3 mm thick and 0.81 sqm. in area, clamps at 1 M centre to centre including, necessary excavation, laying and fixing the conductor, providing & fixing 40 mm G.I pipe upto 3 M height from ground and 0.5 M below ground including making all connections, filling the earthing pit with charcoal, salt, etc. and refilling and watering, etc. complete as per specifications laid down in relevent I.S. codes.			
i)	For Tape of 10M length	No	**10261.00**	**1003.00**
ii)	Rebate / Extra rate per metre length or part thereof over and above initial length of 10M	Mtr	**135.00**	**6.00**
3	Providing, hoisting and fixing in position inverted 'J' type 100 mm dia. **C.I. cowl type ventilators** with mosquitoproof aluminium mesh at top including applying 2 coats of anti-corrosive paint, etc. complete as directed by Engineer-in-charge, weighing not less than 35 kg.	No	**2125.00**	**1021.00**
4	Providing, hoisting and fixing in position **C.I. manhole, frame and cover** of best quality and of required size and shape with locking			

Sr No	Item Description	Unit	Rate (in Rs.) 2019-20	LABOUR INVOLVED
	Item No 4 Contd			
	arrangements including applying 2 coats of anti-corrosive paint, etc. complete			
i)	90 x 60 cm size and weight 35 kg	No	**2924.00**	**220.00**
ii)	Rate on weight basis for any size and type of frame and cover	Kg	**84.00**	**7.00**
5	Providing and fixing in position **M.S. ladder** 0.50 M wide consisting of 75 x 10 mm M.S. flats as stringers and 16 mm dia M.S. bars in double rows as steps placed at 25 cm c/c including cost of material and labour involved, welding, anchoring and applying 3 coat of anti-corrosive paint, etc. complete as directed by Engineer-in-charge.	RMT	**1362.00**	**196.00**
6	Providing and applying **epoxy paint** of approved make (Shalimar, Ciba or Mahindra & Mahindra) to concrete surface of RCC ESR or GSR or any other structure including cleaning the surface by scrapping and air blowers to the satisfaction of Engineer-in-charge, necessary scaffolding, etc complete with all leads and lifts and giving satisfactory hydraulic test for water tightness as per I.S. codes			
	a) For new surfaces - Two coats.	Sq.m	**640.00**	**337.00**
	b) For old surfaces - Two coats.	Sq.m	**721.00**	**405.00**
7	Providing and constructing **RCC spiral staircase** in M-250 mix concrete at site of work and consisting of central vertical column of 400 mm dia and steps in RCC M-250, tie members at each brace level, RCC parapet wall 80 cm high including cost of all labour and material involved, cost of scaffolding, centering, shuttering, curing, finishing in CM 1:3 proportion including RCC M-250 footing foundation, its excavation, refilling and cleaning the site, etc. complete as per type design, with 3 coats of cement paint.	RMT	**5594.00**	**378.00**
8	Providing and constructing **RCC ventilating shaft** of diameters and height mentioned below with required number of RCC 15 x 15 cm size columns and RCC circular slab or dome over the pillars in M-250 including cost of all material and labour, providing and fixing steel or wooden frame & providing & fixing G.I. flyproof mesh of 26 gauge and providing and applying in 3 coats of oil paint			

Sr No	Item Description	Unit	Rate (in Rs.) 2019-20	LABOUR INVOLVED
	Item No 8 Contd.			
	to wooden or steel frame and cement paint to concrete structure. etc. complete as directed by Engineer-in-charge.			
i)	0.9 M dia x 1.35 M height	No	**5910.00**	**672.00**
ii)	1.2 M dia x 1.80 M height	No	**7634.00**	**872.00**
iii)	1.5 M dia x 2.25 M height	No	**12049.00**	**1397.00**
9	Providing and installing **mercury water level indicator** for RCC ESR and wash water tank site as per instructions of Engneer-in-charge at ground level of the tank or nearing pump house or room for RCC ESR having 15 mtrs. staging height and 5 mtrs. water storage height with indication of water height in storage tank in metre and 1/10th of meter including providing and installing 15 mm dia class 'B' G.I. piping with necessary accessories from bottom of the tank upto the instrument as per instructions of Engineer-in-charge.	No	**19246.00**	**3212.00**
	For Extra stage height over 15M or part thereof and water depth over 5 M or part thereof	Mtr	**1026.00**	**172.00**
10	Providing and Erecting, installing and commissioning **Barometric Leg Chlorination system** for water treatment plant upto 5 MLD. capacity as per manufacturers specifications with all required materials viz. 15 Kg. pressure yellow PVC pipe, specially prepared chamber, mixing chamber, scrubber unit, gas pressure flexible pipe, brass nozzle nipple, electronic alarm unit, PPM dose, indicator of 25 mm dia. 4mm thick glass tube (Borosil), gas ubit opening spanner 3 hole type, instruction board, aluminium pipe upto sump (Maximum length 15 Mtr.) etc. including civil works wherever required for above material fittings, including satisfactory test and trial at work site etc. complete. (Item do not include construction of chlorine Gas Room of 3.0 x 3.0 Mtr. or adequate size).			
	For 5 MLD Capacity	No	**118798.00**	**11451.00**
	Add/Deduct per MLD or part of per MLD capacity.	MLD	**4008.00**	**413.00**

Sr No	Item Description	Unit	Rate (in Rs.) 2019-20	LABOUR INVOLVED
11	Providing and fixing **water level indicator** upto 5 M height including M.S. enamelled gauge plate **300 mm wide 3 mm thick**, P.V.C. float, providing and fixing required accessories such as pointer, pulleys, nylon thread including cost of all material, labour, etc. complete.	No	**10032.00**	**1789.00**
12	Providing and fixing **water level indicator** upto 5 M height including M.S. enamelled gauge plate **150 mm wide 3 mm thick**, P.V.C.float, providing and fixing required accessories such as pointer, pulleys, nylon thread including cost of all material, labour, etc. complete.	No	**6184.00**	**1824.00**

Section -L - TRIAL RUN

Sr No	Item Description	Unit	Rate (in Rs.) 2019-20	LABOUR INVOLVED
1	Commisioning **running and maintaining** the scheme to quantites, rated capacity, including manning necessary personnel such as operator, valveman, etc. as per requirements of the scheme and who should also administer chemical dose for a period of 1 month for individual scheme and 3 months for regional scheme, together with training of personnel spared by MJP/ Local Body and handing over the scheme to Local Body after completion of the above period as directed by Engineer-in-charge.			
	Note:			
	Required chemicals to be supplied by Department free of cost and electricity bill will also be paid by the Depertment.			
	a) For **single village Without WTP**	Per Month	**22399.00**	**15444.00**
	a -1) For **single village With WTP**	Per Month	**26132.00**	**18018.00**
	b) For regional scheme **upto 3 villages** with raw water pumping, one treatment plant with pumps, raw water pumping main, leading main, ESR, BPT and distribution system etc.	Per Month	**46372.00**	**38504.00**
	c) For regional scheme **upto 3 villages** with pumping, pumping main, leading main, ESR, BPT and distribution system etc. **(Without WTP).**	Per Month	**29993.00**	**24904.00**
	d) For regional schemes **upto 3 villages**, with raw water pumping , pumps , raw water pumping main, leading main,ESR, BPT and distribution system etc. **(Without WTP)**	Per Month	**30448.00**	**25281.00**
	e) Add for every additional village	Per Month	**8296.00**	**6126.00**
	f) Add for every pumping station.	Per Month	**13649.00**	**12716.00**

ORIENTED PVC PIPE (O-PVC)

RECEPTION, STORAGE, INSTALLATION AND TEST INSTRUCTIONS

RECEPTION

After the reception of the pipes, it is necessary to check their state. Before its installation, you should remove the caps and make a sampling to verify that all the pipes are correct.

Checking the next points is particularly important:

- The pipes should be free of dirt.
- The chamfer in the spigot end should not be damaged.

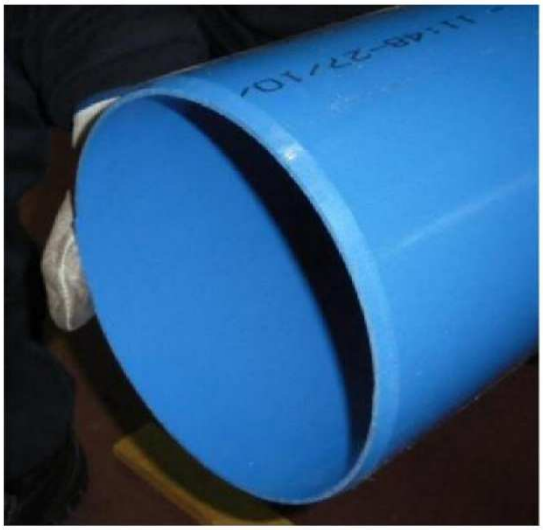

CORRECT

INCORRECT

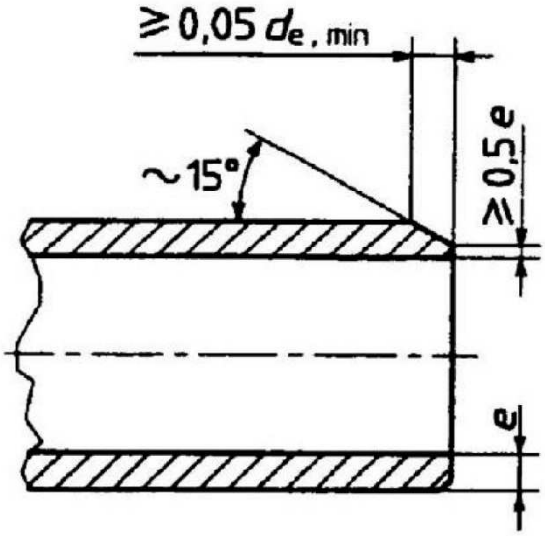

- The seals should be placed correctly in their housings.

CORRECT

INCORRECT

- The surface and the inner part of the pipes and sockets should not be damaged.

STORAGE

We suggest the following guidelines:

- Store the pipes horizontally on a flat surface and place supports every 1.5 meters to avoid the bending of the product.
- Avoid scratches especially in the crest of the socket, due to dragging the pipe on the ground, mainly if the surface is made of stone, concrete or asphalt.
- Do not stack more than 1.5 meters high, as this can damage lower pipes or even the upper pipes could fall.
- The sockets should be free, alternating sockets and ends.
- In case of prolonged sun exposure, protect pallets with an opaque material. White colour is preferable because it avoids the over-heating of the pipes.

REALIZATION OF THE TRENCH

The trench must be free of stones at the bottom and at the sides.
Stones smaller than 10-20 mm are allowed, but they cannot be the main size of the ground particles.

Minimum trench width:

DN (mm)	Minimum width of trench B (m)
90-250	0.60
315	0.85
355	1.00
400	1.10
450	1.15
500	1.20
630	1.35
800	1.65

Depth of trench H (m)	Minimum width of trench B (m)
h < 1.00	0.60
1.00 < h < 1.75	0.80
1.75 < h < 4.00	0.90
h > 4.00	1.00

As a rule of thumb, when there is no road traffic involved, the pipes' crown will be at a minimum depth of 0.6 meters; with road traffic, the minimum depth is 1 meter.

BEDDING AND FILLING THE TRENCH

Pipe must be installed in the following circumstances:

1. Before placing the pipe, a sand bed should be prepared (a fine granular material could be used instead of sand) with a thickness from 10 cm to 15 cm. The pipe should be well aligned and levelled.
2. The pipe must lie on the sand bed. It must be ensured that all the lower part of the pipe is settled on the sand bed trying to soak as much as possible in order to make the angle of sand that supports the kidneys of the pipe as big as possible.
3. Once the pipe is placed, chamberlain sides must be filled with the selected material and compacted to achieve >95% Proctor Normal.
4. The trench must be filled with the selected material and compacted laterally until the upper part of the pipe is buried at least 30 cm.
5. Steps 3 and 4 can be done with the same natural material obtained from the excavation, trying to avoid rocks and large stones, and checking that this natural material can support the forces produced by the pressure inside of the pipe.

Natural soil can be used as the selected filler material whenever it fulfills the following criteria:

a) The material cannot consist of angular stones or similar material.
b) Filler material should not contain bigger particles than the ones shown in the following table.
c) Filler material should not contain blocks of soil twice the size of the maximum dimensions of the particles given in the table.

Maximum particle size

Nominal diameter DN	Maximum size mm
DN <100	15
100≤ DN <300	20
300≤ DN <600	30
600≤ DN	40

6. From the 30 cm above the pipe until the surface of the ground, the trench can be filled with natural material not specifically selected and compacting directly over the whole surface of the trench.

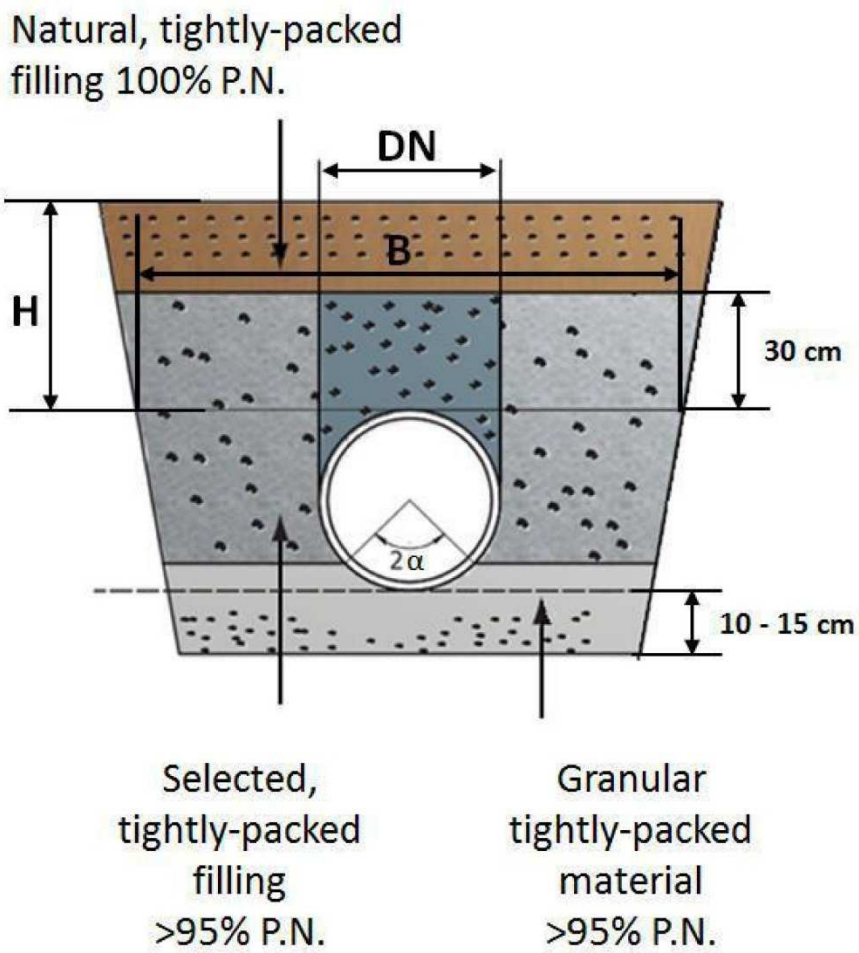

ASSEMBLY

- Remove the protection caps.
- Verify that the pipe is clean and in good condition. Paying attention to the sockets and spigot ends.
- Check that the chamfer is correct and free of cracks.
- Verify that the seal is in its place, clean and free of foreign materials (stones, sand, etc.).
- Lubricate the chamfer of the spigot and the seal with joint lubricant.
- Line up the pipe as much as possible horizontal and vertically.
- Insert only the chamfer edge of the socket, just to support the pipe but leaving the socket lip free.
- In the case of pipes with nominal diameter ≤250 mm, a firm and dry push should be given to seize the momentum produced by the free movement in the lip of the socket and introduce it until the mark is hidden into the socket.
- When installing diameters >250mm, one should use mechanical means to introduce the pipe using materials such as wood, hoists, tackles or slings.

In the next table, you can find an approximated number of assemblies per diameter with 1kg of lubricant.

DN (mm)	90	110	140	160	200	225	250	315	355	400	450	500	630	800
Assemblies	87	76	54	46	34	32	30	25	21	17	16	14	12	9

PIPE CUTTING

Pipes can be cut transversally using a circular saw or a hacksaw. The resulting male cut ends should be chamfered in order to be entered manually in another socket pipe or fitting. The chamfer can be made with a circular saw and be reviewed later with a file. The chamfer should be approximately of 15º.

A mask must be worn to prevent dust inhalation and protections and safety measures must to be taken for cutting machines.

Pipes chamfered on-site are less accurate than those made at the factory. Because of that, they could require higher introduction efforts or even require simple mechanical means to place the spigot inside the socket.

COLD BENDING OF PIPE (23º C)

The pipe can bend at room temperatures (± 23ºC) in the trench up to the limits defined in the next table. These curves must to be done always in cold (don't heat any part of the pipe or socket) by manual efforts (you can use simple items to help in case of pipes DN> 250mm) and without damaging the geometry of the plugs.

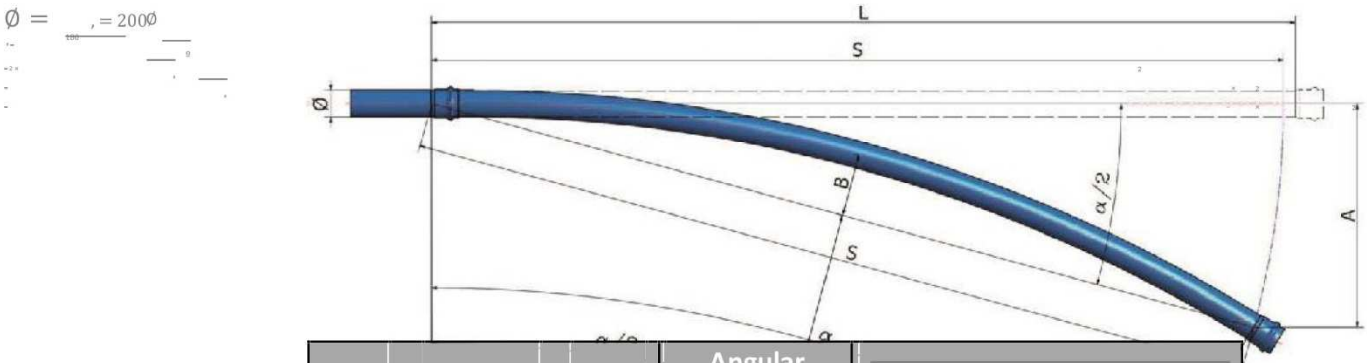

		Pipe curvature			Angular deviation of the socket	Curvature + angular deviation (full angle) angular		
DN	L	R	α/2	A	angle	R'	α'/2	A'
mm	m	m	degrees	m	degrees	m	degrees	m
90	5,78	18	9,2	0,92	2	15	11,2	1,12
110	5,78	22	7,5	0,75	2	17	9,5	0,95
140	5,76	28	5,9	0,59	2	21	7,9	0,79
160	5,75	32	5,1	0,52	2	23	7,1	0,71
200	5,73	40	4,1	0,41	2	27	6,1	0,61
225	5,70	45	3,6	0,36	2	29	5,6	0,56
250	5,68	50	3,3	0,32	2	31	5,3	0,52
315	5,63	63	2,6	0,25	2	35	4,6	0,45
355	5,61	71	2,3	0,22	2	38	4,3	0,42
400	5,58	80	2,0	0,19	2	40	4,0	0,39
450	5,56	90	1,8	0,17	2	42	3,8	0,37
500	5,58	100	1,6	0,16	2	44	3,6	0,35
630	5,53	126	1,3	0,12	2	49	3,3	0,31
800	5,42	160	1,0	0,09	2	52	3,0	0,28

The pipes may be subjected to greater curvatures with high efforts, but it is not recommended to overcome these limits to avoid compromising the safety coefficient of the pipe.

ANGULAR DEVIATION ALLOWED IN THE SOCKET

In addition to the curvature of the pipe, an angular deviation is allowed at the junction between pipes. Therefore in the final layout of the pipes, one can add both effects.

It is important not to exceed the established values of angular deviation in the socket-end when bending the pipe.

(1) Total length of the pipe: 5.95 meters.

DN	Maximum angular deviation	Displacement in the socket (D)
mm	angle (º)	D(mm) (1)
90-800	2º	200

The pipe connections can be subject to greater angular deviations if subjected to high stresses. It's recommended not to exceed those limits in order to avoid endangering the safety coefficients of the assembly under pressure.

FORCES PRODUCED BY THE BENDING OF THE PIPE

The bent pipeline behaves like a narrow-angle curve; this means that there is some backpressure on the ground as the table below shows. These cross-pressures, under normal conditions, can be supported by a sufficiently compacted soil, otherwise, if necessary, they should be supported with anchors in excessive curvatures.

			Forces in a curved pipe (α / 2) (2)			
	bar	bar	bar	bar	bar	bar
DN	1	5	10	15	20	25
mm	kN	kN	kN	kN	kN	kN
90	0,10	0,51	1,02	1,53	2,04	2,55
110	0,12	0,62	1,25	1,87	2,49	3,12
140	0,16	0,79	1,58	2,37	3,17	3,96
160	0,18	0,90	1,81	2,71	3,61	4,51
200	0,22	1,12	2,25	3,37	4,50	5,62
225	0,25	1,26	2,52	3,78	5,04	6,29
250	0,28	1,39	2,79	4,18	5,58	6,97
315	0,35	1,74	3,48	5,22	6,96	8,70
355	0,39	1,96	3,91	5,87	7,82	9,78
400	0,44	2,19	4,38	6,57	8,76	10,96
450	0,49	2,46	4,91	7,37	9,82	12,28
500	0,55	2,74	5,48	8,22	10,96	13,69
630	0,68	3,42	6,84	10,26	13,68	17,10
800	0,85	4,26	8,51	12,77	17,03	21,28

(2) Resultant forces in a pipe 5.95 meters long.

PRESSURE TEST AT WORKS

On-site testing should be performed according to local regulations and instructions laid down in the project.

During the assembly, the pipe installed should be tested in sections fully executed (the length may vary between 500 and 1.000 meters). The ends of the sections should be closed with appropriate fittings when being tested.

- Two main aspects must to be taken into account: When the assembly are exposed, the water-tightness of the network should checked, to see if there is any leak in such unions and locate them in case they exist. Except the cases of seal expulsion due to over-pressures or excessive angular deflections, leaks are manifested especially at very low pressures.
- On the other hand, for testing high-pressure pipes and fittings, they must be properly anchored (reductions, changes in direction, junctions, valves, cutting, etc.) and the pipes should be conveniently set in the trench (burial and compaction landfill). Otherwise, pipes and fittings could be unplugged by landslides in the field.

Therefore, it is recommended to test one of the following methods:

- **Method A:**

  Burying the pipe conveniently with enough compaction to be able to withstand the stresses caused by the pressure of the test, but leaving assemblies uncovered (in some circumstances it is difficult to anchor pipes and fittings, leaving the unions visible). Any reductions, changes in direction, junctions and shutoff valves must be properly anchored.

  Under these conditions, all pressure and leakage tests can be performed observing the uncovered unions and spot the appearance of leaks.

- **Method B:**

  Perform a shallower anchorage of pipes and fittings, leaving assemblies out of any possible problems. Doing a first leak test by filling the line with water and observe that there are no water losses at the unions (most of the leaks occur at low pressures). In case of leaks, the reparation would be easier than with the fully anchored and buried pipes.

  If required by local regulations, you could anchor the pipes and accessories conveniently for testing high pressure, keeping the assemblies exposed. If not, you can complete the burial of pipes and fittings with the correct compaction, thus facilitating the necessary anchorage for the high pressure test.

The pressures and time limits to test the pipes on-site are:

	Pressure	Maximum Time	Pressure	Maximum Time
PN16	Up to 21 bars	120 minutes	21 – 22.4 bars	60 minutes
PN20	Up to 25 bars	120 minutes	25 - 28 bars	60 minutes
PN25	Up to 30 bars	120 minutes	30 - 35 bars	60 minutes

EFFECT OF TEMPERATURE

When the temperature is high, plastic pipes undergo a loss of mechanical properties and we must take this into account. Because of that, we must avoid the following conditions during pressure tests:

- Pipe partially or fully exposed to weathering (line uncovered).
- High outside temperature.
- Standing water inside the pipe.
- Prolonged sun exposure prior to the test.

All these circumstances may increase the temperature of the pipe above its operating temperature, so the overpressure test can damage the pipeline. In order to avoid that, it is recommended to:

- Cover the pipe once the tightness of the network is verified.
- Wait for pressure testing when the pipe has been exposed to sunlight.

High temperatures (over 25ºC) or demanding or aggressive applications can reduce Allowable Operating Pressure **(PFA)** of pipes in comparison to the Nominal Pressure (NP).

$$PFA = PN \cdot f_T \cdot f_A$$

The derating factor (f_T) as function of operating temperature can be obtained from the graph on the right.
The derating factor related to application of the system (f_A) must be determined by the Project Manager.

Note: Project design and execution is responsibility of the Project Manager and the Contractor, respectively.

Temperature Ratio Graph

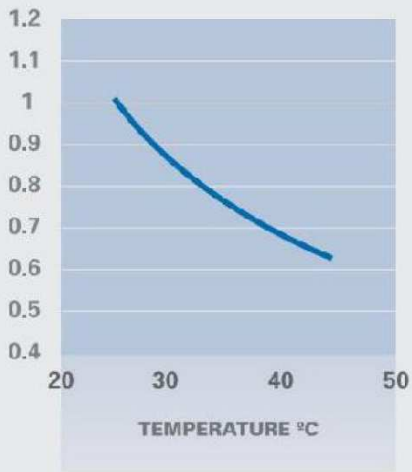

CLAUSE NO. **SPECIFICATIONS FOR INTERNAL LINING & EXTERNAL COATING OF STEEL PIPES IN POTABLE WATER SERVICE WITH 100% SOLIDS (SOLVENT LESS) TWO COMPONENT, FAST CURING, RIGID, DIRECT TO METAL (DTM) POLYURETHANE COATING**

1.00.00 **SCOPE**

This specification governs the minimum requirements for materials, equipment, application, inspection, repair and handling aspects associated with the coating and lining of steel pipes using 100% Solids (Solvent less) Two Component, Fast Curing, Rigid, Direct to Metal (DTM) Polyurethane Coating classified under ASTM D-16, Type V.

1.01.00 It is envisaged that the Polyurethane lining & coating will provide a hard, inert, impermeable barrier with outstanding adhesion; corrosion, impact and abrasion resistance to protect the surface from corrosion and abrasion in the operating conditions. Further, the Polyurethane Lining shall not impart any odor, flavor, color or turbidity to the water; shall not leach toxic chemicals or metals and shall not provide nutrient for growth of microbes / aquatic microorganisms.

1.02.00 The steel surface preparation, prior to actual commencement of coating, to conform to SSPC-SP 10/ NACE No.2 (Joint Surface Preparation Standard from Society for Protective Coatings, USA and NACE International, USA dated September 15, 1994) near white blast cleaning, included in the scope of cleaning.

1.03.00 Bidder shall obtain prior written approval from the Owner for any deviations from the requirements of this specification and / or the standard referred herein.

1.04.00 The work shall conform to the following documents a) to f) (latest revision or as specified). Serial g) is provided for reference.

a) SSPC SP – 1	Solvent Cleaning
b) SSPC SP – 10 /NACE No.2	Near – White Blast Cleaning
c) SSPC – SP COM	Surface Preparation Commentary
d) SSPC PA2	Measurement of Dry Paint Thickness with Magnetic Gauges
e) ASTM D 4541	Method for Pull Off Strength of Coatings Using Portable Adhesion Testers
f) NACE RP 0188	Discontinuity (Holiday) Testing of New Protective Coatings On Conductive Substrates
g) ANSI / AWWA C 222	Polyurethane Coating for The Interior & Exterior of Steel Water Pipe Fittings

2.00.00 **GENERAL REQUIREMENTS & COATING VENDOR REQUIREMENTS**

2.01.00 The bidder shall perform all work in accordance with this specification and other requirements noted herein.

2.02.00 100% Solids, Two Component Polyurethane are specialized coatings characterized by very short pot lives and plural component airless spray. For coating/ lining at the pipe mill, the coating/ lining shall be applied by the pipe mill under technical guidance and

supervision of the coating material manufacturer. For site application and for field joints of cutback sections, the coating manufacturer shall undertake the work on 'Supply & Apply Basis".

2.03.00 VENDOR REQUIREMENTS - COATING MATERIALS

Bidder shall provide following details of coating materials proposed to be used in conformance to tender requirements:

2.03.01 Product Data Sheet of the coating material.

2.03.02 Test Reports from internationally reputed test agencies for properties listed in Para 3.01.00 in order to prima facie establish conformance of the coating material with the requirements of this specification. Actual conformance shall be established as per 4.02.00 and 4.04.00.

2.04.00 VENDOR REQUIREMENTS - COATING APPLICATION

Bidder shall provide, following details:

2.04.01 List of equipment to be deployed for the coating works, such as blast cleaning equipment, airless spray equipment, with hourly / daily capacities.

2.04.02 List of applications of liquid spray applied coating & lining such as 100% Solids Polyurethane Coating.

2.04.03 Copy of agreement with coating contractor wherein the coating manufacturer commits to provide full time technical supervision and quality control assistance during all phases of the coating and lining process.

2.05.00 Bidder shall submit a detailed written description in the form of a QA/QC PROCEDURE & FIELD QUALITY PLAN MANUAL for owner's approval prior to commencing the work. The approved manual shall contain entire understanding between all parties concerned relating to coating materials, application procedure and quality assurance procedures of the coating work. The following details will be provided in the manual:

a) Coating Materials Product Data Sheet & Performance Tests Reports in compliance of properties listed in Para 3.01.00, A) to L). Test reports must be from internationally reputed laboratory.
b) Coating Materials Storage at Shop.
c) Surface Preparation & Application Equipment Proposed to Be Used
d) Surface Preparation Procedure & QC
e) Coating Procedure & QC
f) Repair Procedure
g) Testing of Coating

<u>Field Joints</u>

For field joints, the following additional details will be provided:

h) Methodology / Sequence of Coating
i) Daily Log Sheet Formats
j) Field Quality Plan with Tests & Frequency for Coating Materials, Blast Cleaning, Coating & Final Testing.

2.06.00 The materials shall be applied by international standard Plural Component Airless Spray

System such as Graco, Gusmer, Wiwa etc. as per the requirements specified by the coating material manufacturer. No make shift/ nonstandard spray equipment shall be used.

Pipe Mill Coating / Lining

Blast cleaning operations will be carried out using automated internal and external centrifugal wheel blast cleaning equipment. Coating and lining operations will be carried out using automated internal & external coating equipment with spinning pipes and longitudinal traveling spray tips.

Site Coating/ Lining (Projects/ Sections)

For smaller projects/ sections, it shall be viable to conduct coating operations on the site. Blast cleaning operations will **only** be carried out using automated internal blast cleaning equipment with longitudinal traveling, rotating blast nozzles, compressed air and disposable abrasive. Rotation and transverse speeds shall be set by variable speed drives.

Coating operations will be carried out using automated internal coating equipment with longitudinal traveling, rotating spray tips. Rotation and transverse speeds shall be set by variable speed drives.

Hand held nozzle blast cleaning or coating operations will not be permitted, except for joint areas and special fabricated items such as bends, T's etc.

2.07.00 100% Solids Polyurethane systems are solvent free eliminating solvent health hazards and flammability concerns All safety precautions warranted by good industrial hygiene practices and regulated by local, state or central laws must be taken into consideration while applying these coatings.

2.08.00 Procedure Qualification Trial (PQT)

On commencement of works a pre-qualification trial will be conducted on the pipe. The following parameters shall be recorded during procedure qualification test.

- Salt content in abrasive and after blast cleaning.
- Blast profile and cleanliness
- Visual inspection of coating.
- DFT
- Adhesion
- Hardness

Following PQT, the pipe will be cleared for regular work.

3.00.00 MATERIAL SPECIFICATIONS

3.01.00 **POLYURETHANE COATING:**

Spray applied, 100% Solids (Solvent less) Two Component, Fast Curing, Rigid, Direct to Metal (DTM) Polyurethane Coating with following performance requirements:

Production Quality Control Tests			
A) NOMINAL THICKNESS as per SSPC PA 2	**Internal Lining:**		**500 Microns**
	External Coating:		**As under:**
	Pipe Dia From (m)	Pipe Dia To (m)	Coating DFT

			Microns
	> 0.4	Up to 1.0	**625**
	> 1.0	Up to 1.5	**750**
	> 1.5	Up to 2.2	**875**
	> 2.2	Up to 3.2	**1,000**

B) ADHESION ASTM D-4541 (Elcometer Pull Off)	10 N / mm^2 Min.
C) SURFACE HARDNESS ASTM D 2240 (Cured Film - Shore D) Test @ 25°C.	> 65 Shore D
D) ELECTRICAL INSPECTION (NACE RP-0188)	0 (Nil) Holidays
<u>Type Test – Short Duration</u>	
E) IMPACT RESISTANCE ASTM G-14, Test @ 25°C.	75 Inch – Lb. Min.
F) ABRASION RESISTANCE ASTM D 4060 Taber Abraser CS-17 Wheel 1,000 gms. 1,000 cycles. Test @ 25°C.	Weight Loss 100 mgs. Max
G) FLEXIBILITY 180° Bend -1.0 mm thick ASTM D 1737/ D 522. Test @ 25°C.	Pass over 77 mm Mandrel without cracking or delamination.
H) DIELECTRIC STRENGTH ASTM D 149 Test @ 25°C.	400 Volts/ Mil (Min.)
I) CATHODIC DISBONDMENT (3% NaCl, -1.5 V, 70-75°F, 30 days) ASTM G-8 or G-95, 1.00 mm Coating	Average radius 12 mm (Max)
<u>Type Test – Long Duration</u>	
J) WATER ABSORPTION ASTM D570-98, Procedure 7.4 (Long Term Immersion) Test @ 25°C.	< 2.00 %
K) POTABLE WATER CERTIFICATION As per ANSI - NSF 61 or Singapore SS375 or WRAS 5030. Tested at 35°C	Complies with requirement of the standard.
L) Total Organic Carbon (TOC) as per APHA-AWWA-WEF5310C	< 2.00 milligram/ Litre
Tests K) and L) are for internal lining only (not for external coating).	

3.02.00 **PRIMER**

No primer shall be permitted.

3.03.00 **TOP COAT (FOR ABOVE GOUND APPLICATIONS ONLY)**

Sections which are above ground and exposed to sunlight and UV will be top coated

with approx. 50-75 Microns DFT of color fast Acrylic Aliphatic Polyurethane. The top coating shall be done before the 100% Solids Polyurethane Coating is fully cured.

4.00.00 **COATING QUALIFICATION & TESTING**

4.01.00 **Coating Material Qualification:** In order to establish conformance of the coating brand (with product identification number), with the requirements of this specification test reports from internationally reputed test agencies such as KTA Tator Inc., USA/ equal will be provided by the bidder for properties listed in Para 3.01.00 a) to k).

4.02.00 **Verification Of Properties:** In order to verify the reports provided as per 4.01.00, buyer will retain the option to get the product tested **once** from internationally reputed test agencies such as KTA Tator Inc., USA/ equal for properties listed in para 3.01.00 e) to k) at vendors cost. Testing shall also include 'Chemical Fingerprinting' of liquid components by Fourier Transform Infra-Red Spectroscopy (FTIR). Sample witnessing, and sealing shall be done jointly by the bidder, owner & coating vendor at site during PQT.

4.03.00 **Approved Coating Brands:** (with specific product identification number) once tested as per 4.02.00 and found in conformity with this specification will not need to tested again for 3.01.00 e) to k) for further packages. Instead, only FTIR testing as per 4.04.00 only will be done for approved makes.

4.04.00 **Verification of Supply Batches:** In order to verify that the supply lots have the same formulation as the coating tested as per 4.02.00, supply batches will be randomly tested for FTIR. The test laboratory shall confirm that supplied materials conform to the reference spectrum on record. Sample witnessing, and sealing shall be done jointly by the bidder, owner & coating vendor.

4.05.00 **Production Quality Control Tests**: Applied coating will be field tested for properties a) to d) of Para 3.01.00: Thickness, Adhesion, Hardness and Holidays in accordance with Section 8.00.00.

5.00.00 **SURFACE PREPARATION**

100% Solids, Polyurethane Coatings have exceptional corrosion and abrasion / impact resistant properties but must be considered part of an engineered system which includes adequate surface preparation. It is axiomatic in protective coating work that the performance of the most appropriately chosen coating system will be no better than the surface preparation.

BLAST CLEANING

5.01.00 Before blast cleaning, visible deposits of oil and grease shall be removed in accordance with SSPC SP-1. Any surface imperfections remaining (after fabrication) such as sharp fins, weld spatter, or burning, slag shall be removed from the surface.

5.02.00 The steel surface shall be blast cleaned to SSPC SP-10 / NACE No.2 Near White Blast Cleaning.

5.03.00 A near - white blast cleaned surface, when viewed without magnification, shall be free of all visible oil, grease, dust, dirt, mill scale, rust, coating, oxides, corrosion products and other foreign matter, except for staining as noted in section 5.04.00.

5.04.00 Random staining shall be limited to no more than 5 percent of each unit area of surface as defined in section 5.07.00 and may consist of light shadows, slight streaks, or minor discolorations caused by stains of rust, stains of mill scale or stains of previously applied coating.

5.05.00 Acceptable variations in appearance that do not affect surface cleanliness as defined in section 5.03.00 include variations caused by type of steel, original surface condition, thickness of the steel, weld metal, mill or fabrication marks, heat treating, heat effected zones, blasting abrasive, and differences in the blast pattern.

5.06.00 Anchor profile obtained by blast cleaning will be > 75 Microns when measured with a surface profile gauge such as Elcometer 123. The average reading from five (5) randomly selected areas shall constitute the height of the profile. In case pipe curvature causes error in readings, the blast profile will be tested on reference flat steel coupons.

5.07.00 Unit area for determining staining shall be approximately 6,400 mm^2

5.08.00 The bidder shall immediately bring to the Owner's attention any unacceptable metal defects detected at the time of surface preparation and hold the steel piece till such time as cleared for further action.

5.09.00 Any of the following methods of surface preparation may be used to achieve a near white blast cleaned surface:

5.09.01 Air Abrasive Blast Using Disposable Abrasive: Dry abrasive blasting using compressed air, blast nozzles and disposable abrasive. Abrasive will be disposed off after single used and shall not be re-used.

5.09.02 Air Abrasive Blast Using Recycled Abrasive: Dry abrasive blasting using a dosed cycle, re-circulating abrasive system, with compressed air, blast nozzle, and abrasive, with or without vacuum for dust and abrasive recovery.

5.09.03 Centrifugal Wheel Blast Using Recycled Abrasive: Dry abrasive blasting using a dosed cycle, re-circulating abrasive system with centrifugal wheels and abrasive.

5.10.00 Selection of abrasive media for the blasting operation will depend upon the type of system employed (5.09.00 above). Abrasives used shall be as under:

5.10.01 For Air Abrasive Blast (5.09.01): Granulated Copper Slag or Coal Slag.

5.10.02 For Air Abrasive Blast Using Recycled Abrasive (5.09.02) & Centrifugal Wheel Blast (5.09.03) : Steel Grit & Garnet.

5.10.03 No other abrasive media shall be used by the bidder. Bidder shall adopt good blasting practices such as those recommended in SSPC SP-COM.

5.10.04 Bidder shall use size of abrasive media that will ensure the necessary anchor profile height specified. The blast cleaning abrasive shall be dry and free of oil, grease and other contaminants.

5.10.05 The cleanliness and size of recycled abrasive (5.10.02) shall be maintained by the re-cycling system using jet air wash etc. to ensure compliance with this standard. Non-standard or makeshift recycling equipment will not be permitted.

5.11.00 Compressed air used for air abrasive blast cleaning shall be dean, dry and free of moisture and oil. Moisture separators, oil separators, traps or other equipment may be necessary to achieve dean, dry air.

5.12.00 Blast cleaning shall not be conducted during times when the surface will become wet after blast cleaning or when ambient conditions are such that visible rusting occurs before coating, If any rust forms after blast cleaning, the surface shall be re-blasted before coating.

5.13.00 Blast cleaning operations shall be done in such a manner that no damage is done to partially or entirely completed portions of the work.

5.14.00 Wet abrasive blasting shall not be permitted by this specification.

5.15.00 Dust and residues shall be removed from prepared surface by brushing, blowing off with dean, dry air or vacuum cleaning.

5.16.00 SALT CONTAMINATION

Blast surface will be provided with Chloride contamination not exceeding 20 mg/ m^2. Presence of Chlorides on pipe surface just after blast cleaning of pipe shall be checked using CHLOR-RID Test Kit /equivalent by owner at random intervals as per the decision of EIC. **No coating will be permitted to be applied on surface contaminated with Chloride.**

6.00.00 **COATING**

6.01.00 Nominal thickness of the Polyurethane shall be as per 3.01.00 A) when measured in accordance with SSPC PA 2. The coating shall be applied in a single coat using multiple passes of the spray gun. The finished coating shall be generally smooth and free of sharp protuberances, blistering, bubbling, cracks, de-lamination or other visible defects. A minor amount of sags, dimpling and "curtaining" or overspray spots which otherwise meets specification requirements shall not be considered cause for rejection.

The coating will be dense, free of foam/ porosity and of uniform consistency in its entire thickness.

Material consumption for top coat will be calculated as under:
0.500 mm Thick: 1 Sq.M = 0.500 Litre plus overspray/ wastage.
0.625 mm Thick: 1 Sq.M = 0.625 Litre plus overspray/ wastage.
Etc.
The coating vendor shall state the overspray wastage used in his estimation which will not be less than 30% (Thirty Percent) for automated application. This minimum quantum of material will be supplied and recorded. However, supply & usage of this quantum of material will not be construed as the vendor having met thickness requirements and he will have to comply with provisions of 3.01.00 a) and 8.02.03.

6.02.00 Before beginning coating, measure the humidity using a digital psychrometer or sling psychrometer and calculate the dew point. Measure surface temperature using an Infra-Red non-contact thermometer. Temperature of surface must be at least 3^oC higher than the dew point.

6.03.00 The materials shall be applied by international standard Plural Component Airless Spray System such as Graco, Gusmer, Wiwa etc. as per the requirements specified by the coating material manufacturer. No make shift/ nonstandard spray equipment shall be used. Equipment shall consist of Material Feed Pumps, Purge Pump, Proportioning Pump, Mix Manifold, Static Mixer, Interconnecting Hoses etc. System shall normally be capable of 1500-3000 Psi fluid pressure (at tip) and a material supply rate of 4-10 Litres / Minute.

6.04.00 Applicator must follow standard written instructions from coating manufacturer on material storage, handling and spray.

6.05.00 Partially used and unused material drums must be tightly sealed and contain a blanket of nitrogen to prevent moisture contamination when not in use.

6.06.00 Before application on the substrate apply a test patch for runs or drips and gel time as well as tack free time.

6.07.00 The proportioning pump shall be fitted with a numeric counter to keep track of the volume of materials being used while spraying. Volume of materials used shall be recorded in daily log sheets as per FQP.

6.08.00 Entire thickness shall be built up in a single application (with a number of passes). If the surface is large enough to require more than one day for the coating, the edges of the coated areas shall be feathered and roughened with a grinding tool prior to beginning and coating.

6.09.00 Areas not to be coated shall be masked with tape.

7.00.00 COATING REPAIRS / WELD SEAM COATING

7.01.00 REPAIRS

7.01.01 Defects - Blisters, Cracks Bubbles, De-Lamination Other Visible Defects; Adhesion and Holiday Points

a) Remove the dis-bonded coating by cutting till edge of well adhered coating. Adhesion test points will already have exposed steel. For holiday defects coating removal is not required and only coating surface may be spot ground as per para c).
b) Wipe clean the marked area with a clean cloth. Use solvent in case of oil / grease deposits. Allow to dry.
c) Using steel grinder, grind the exposed area till there is no evidence of rust and surface is new metallic. The steel surface should not be smooth. At the same time roughen slight the surface of approx. ½" of the adjacent intact coating. Blast cleaning may also be used instead of steel grinder if available.
d) Wipe clean the marked area with a clean cloth.
e) Mix small amounts of Polyurethane Hand Mix coating in correct volumetric ratio. Apply using brush or squeegee to the discontinuity and required overlap, taking care to coat within the abraded area only (including overlap).

7.01.02 Coating Thickness Less Than Specified Thickness

a) Record the DFT of the areas marked for repairs.
b) Lightly abrade using brush off blast cleaning or power sanding. Wipe with clean cloth and compressed air.
c) Estimate materials requirement for additional coat and spray apply Polyurethane to obtain required thickness making WFT checks.
d) Test the coating in the same manner as outlined in inspection.

7.02.00 WELD SEAMS – COATING OF CUTBACK SECTIONS

A cutback of 150 mm from ends of pipe shall be left uncoated to prevent damage during seam welding at site. The cutback area may be blast cleaned and may contain primer to reduce corrosion during the installation period. Due care shall be taken during welding to ensure no damage to adjacent intact coating by mechanical damage or weld spatter. Bare steel exposed at the weld seam area shall be blast cleaned using the same procedure as the main pipe.

An overlap of 50 mm (but not more than 100 mm) on the adjacent intact pipe coating shall be roughened during the blast cleaning process. These areas (including overlap) shall be primed, coated and tested using the same procedure as the mainline pipe.

Manual Scarification

In locations where field blast cleaning is prohibited or impractical, the steel surface at cutback location shall be ground to bare shiny metal using steel grinder. Resultant surface shall be rough and not smooth. A width of approx. 50 mm on the adjacent intact pipe coating shall be roughened during the grinding process. Hand mix coating materials shall be applied on the ground steel as well as 25 mm width of the roughened coating using roller or trowel taking care to apply a uniform coating with no depressions in the middle.

7.02.01 The same coating material as the mainline pipe shall be used for coating the cutback section to ensure chemical compatibility and adhesion. The coating materials shall be spray applied at site using procedures outlined in Para 5, 6 & 7.

7.02.02 The ditch will be fully dewatered by bidder prior to any coating operations since water in the ditch will cause ambient humidity to rise making it unsuitable for coating.

7.02.03 Water used for hydro test will be sweet water which will not contaminate the pipe surface. *Due care shall be taken by bidder not to let water / dirt accumulate inside the pipe since this leads to corrosion and corrosive salt deposition on the steel surface which may not be removed by blast cleaning.* This may be achieved by welding vertical steel plate bunds at bottom ends of either side of the pipe.

8.00.00 **INSPECTION**

8.01.00 All work under this specification shall be subject to inspection by the owner or his representative. All parts of work shall be accessible. The bidder shall correct such work as is found defective under the specifications.

8.02.00 The following tests shall be made by the applicator prior to, during and after priming and coating application:

8.02.01 Blast surface profile using Elcometer 123 or equivalent surface profile gauge. The average of readings from five randomly selected areas shall constitute the average surface profile. In case pipe curvature causes error in readings, the blast profile will be tested on reference flat steel coupons.

8.02.02 Hardness shall be tested with a portable Shore D Durometer as per ASTM D 2240. Frequency shall be as per 8.02.05 and the measurement point shall be adjacent to the adhesion test so that the coating repair covers the pinpoint holiday caused by the Durometer.

8.02.03 The dry film thickness shall be checked with a Magnetic Mil Gauge (Positest by DeFelsko or equivalent) in accordance with SSPC PA 2. The average of readings from five randomly selected areas shall constitute the film thickness. No single spot measurement shall be less than 80% of specified thickness. Frequency shall be as per SSPC PA 2.

DFT checks over weld seams shall not be included in the above readings.

8.02.04 Holidays testing using high voltage holiday detector (Tinker Rasor or equivalent) as per NACE International RP 0188-90 "Holiday Testing". Coating to have cured at least 24 Hours prior to holiday test. The location of the holidays shall be noted on the coated surface for repair as per 8.02.02. Final coating shall be holiday free.

Holiday testing shall not be done more than two times on the surface as repeated testing can lead to creation of holidays due to the testing process. Holiday testing after repairs shall be pinpointed and restricted only to the repaired area.

8.02.05 Pull off Adhesion to steel shall be measured using Elcometer/ Positest / equivalent adhesion tester as per ASTM D 4541 using an Aluminum dolly attached to the coating & a perpendicular force applied to the dolly. Average reading from three (3) randomly selected spots shall constitute one test and shall be at least 10 (Ten) N/ mm2. 1 test shall be carried out 500 Sq.M surface area. Adhesion test shall be carried out on fully cured coating (7 days at 25°C).

Use standard 20mm dolly to obtain direct reading from the analog dial gauge of the self-aligning, Type V adhesion tester. For the 20mm dolly the pressure reacted by the dolly is the same as pressure in the actuator and is transmitted directly to the pressure gauge. When using digital version of the tester, enter the correct dolly size being used i.e 20mm.

The following protocol shall be used for determining adhesion test failure / success.

Gauge Reading	Type of Failure		Result / Conclusion
> 10 N/mm^2	T1	90% or more of break at coating – steel surface interface	Coating meets adhesion criteria. Take actual reading of bond strength.
	T2	90% of more of break at coating – dolly interface	Coating meets adhesion criteria. Glue Failure.
<10 N/mm^2	T1	90% or more of break at coating – steel surface interface	Coating does not meet adhesion criteria. Repeat test after 7 days (full cure) of coating application. If adhesion still fails, remove and re-coat.
	T2	90% of more of break at coating – dolly interface	Glue Failure. Allow more curing of glue / replace glue and re-test.

In case pipe curvature causes error in readings, the adhesion will be tested on reference flat steel coupons.

9.00.00 **FIELD PROCEDURES**

Field procedures shall be as per AWWA C 222-08, para 4.10.1 (General), 4.10.2 (Hoisting) and 4.10.3 including sub-sections (Bedding and Trench Back Fill). The contractor shall use every precaution to prevent damage to the protective coating when constructing the pipeline. No metal tools or heavy objects shall be permitted to come into contact with the finished coating. Wide belt slings shall be used to hoist coated pipes. The use of chains, cables, tongs, or other equipment likely to damage the polyurethane coating will not be permitted, nor shall the pipe be dragged or skidded. Where the trench traverses rocky ground containing hard objects that could penetrate the protective coating, a layer of screened earth, sand, or gravel no less than 150 mm thick with maximum particle size of 19 mm shall be placed in the bottom of the trench before installing the coated pipe. If rocks or other hard objects occur in the backfill material along any section of the pipeline, screened backfill with a maximum particle size of 19 mm shall be placed around the coated pipe to a minimum depth of 150 mm above the polyurethane coating before the remainder of the trench is backfilled.

10.00.00 METHODOLOGY & EXECUTION

10.01.00 General

10.01.01 Coating work will be planned and coordinated well in advance of actual execution between bidder and coating vendor to ensure that the work is carried out in a smooth and expeditious manner.

10.01.02 Prior to start of work a "kick off" meeting shall be held between the bidder, coating vendor, FQA and Execution at site to discuss, agree and put on record all operational aspects of installing the Polyurethane Coating.

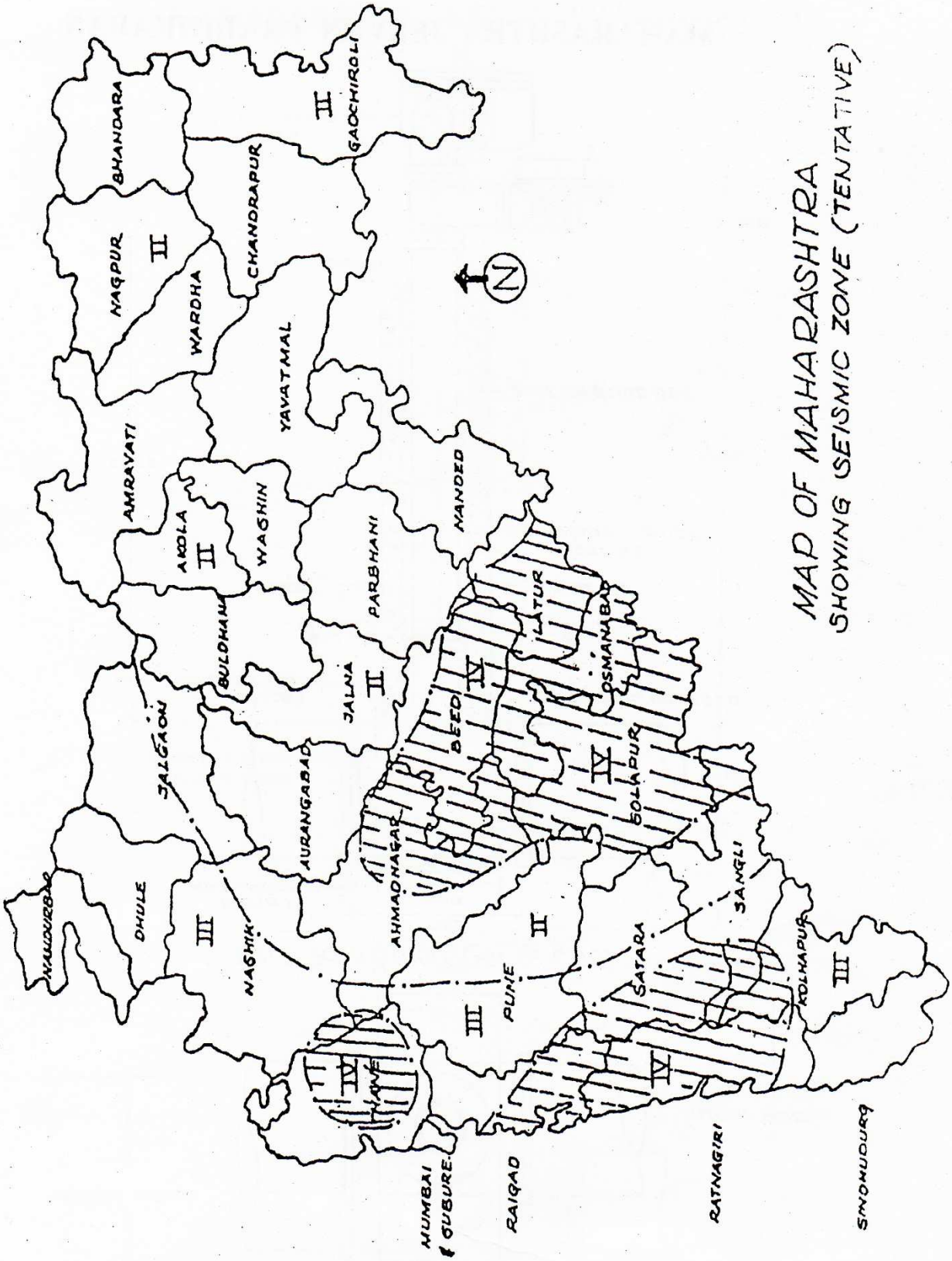

seismic zone map

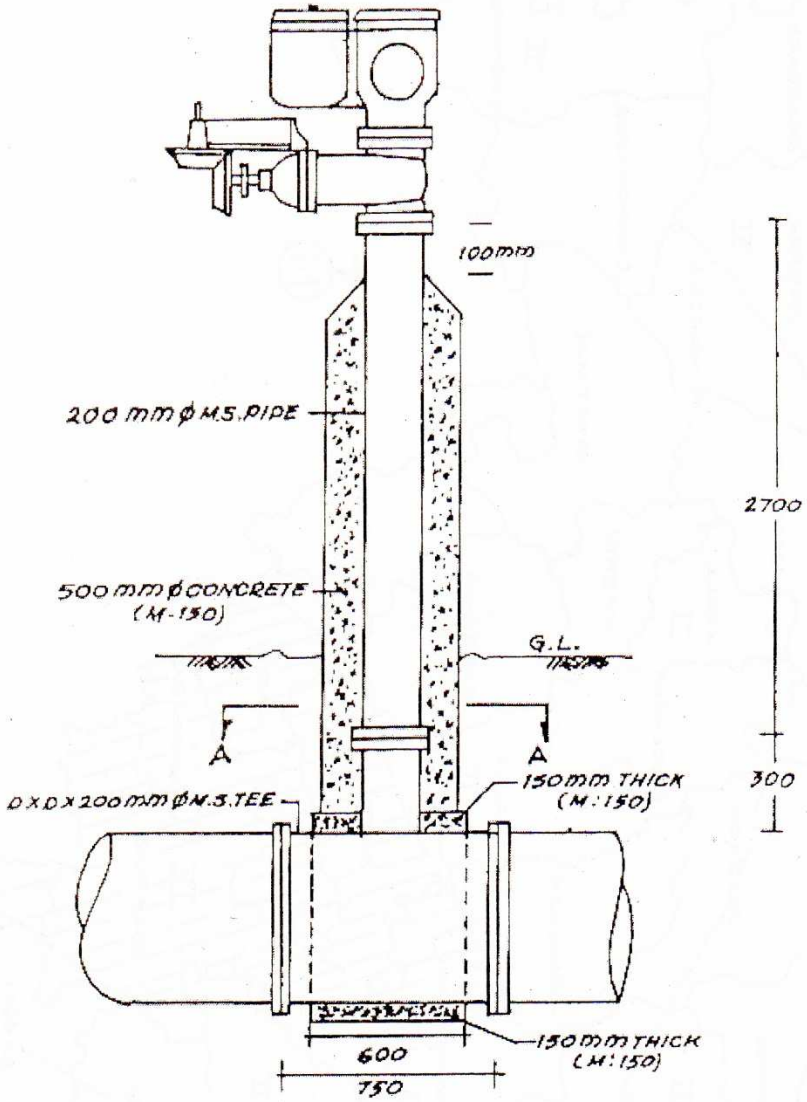

1000 TO 1200 mm ø PIPE LINE

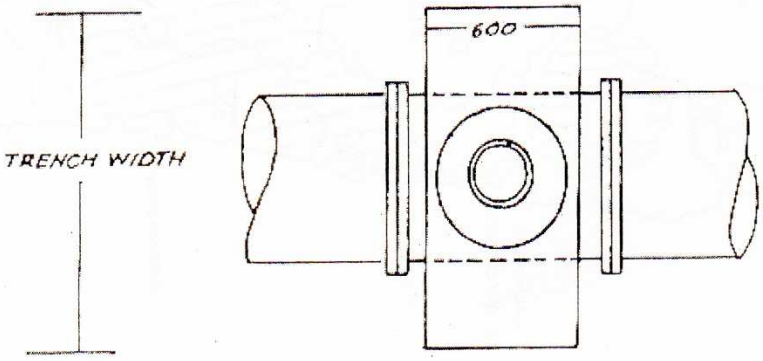

PLAN AT A-A

(● NOT TO SCALE)

TYPE DESIGN FOR FIXING OF AIR VALVE ON SHAFT

MAHARASHTRA JEEVAN PRADHIKARAN

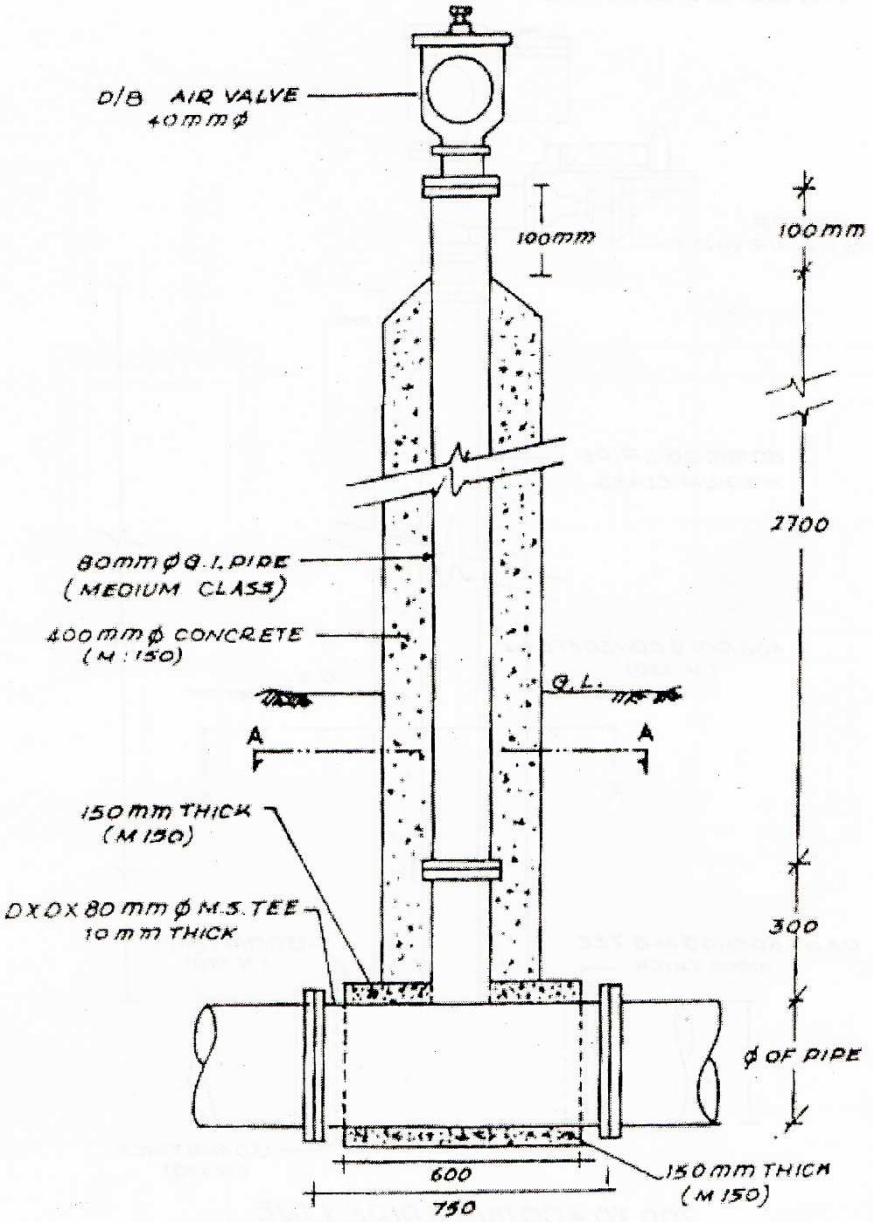

UPTO 150mmφ PIPE LINE
(UP TO 160 PVC)

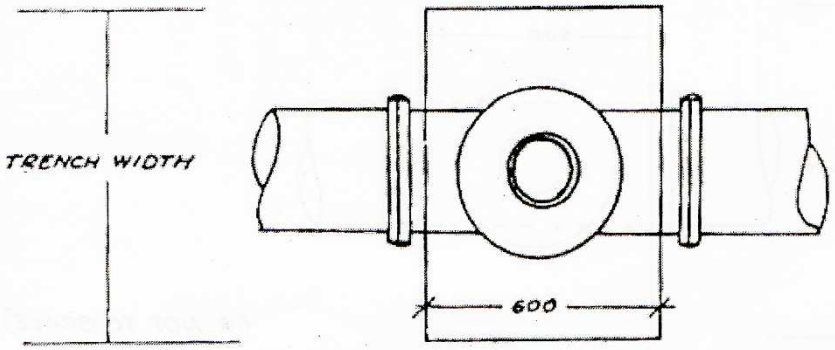

(● NOT TO SCALE)

PLAN AT A-A

TYPE DESIGN FOR FIXING OF AIR VALVE ON SHAFT

MAHARASHTRA JEEVAN PRADHIKARAN

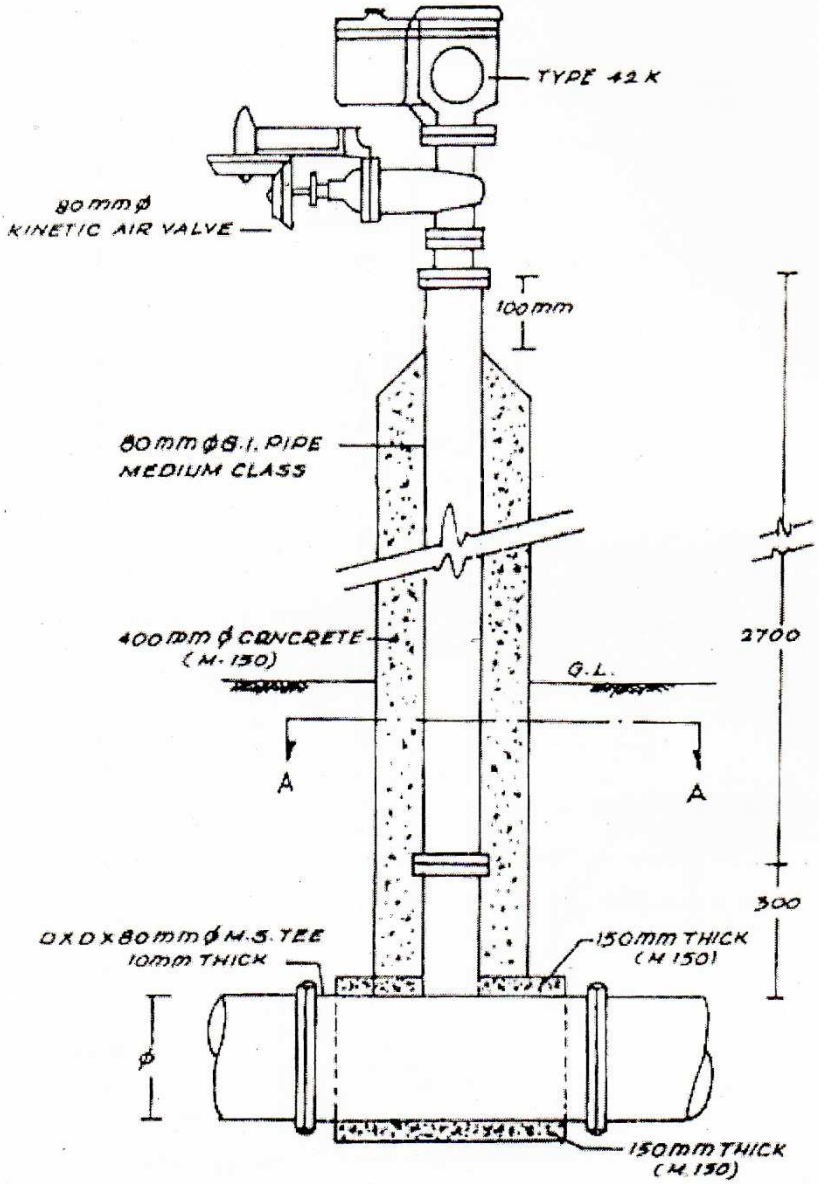

200 TO 400 mm ø PIPE LINE
(180 TO 315 PVC)

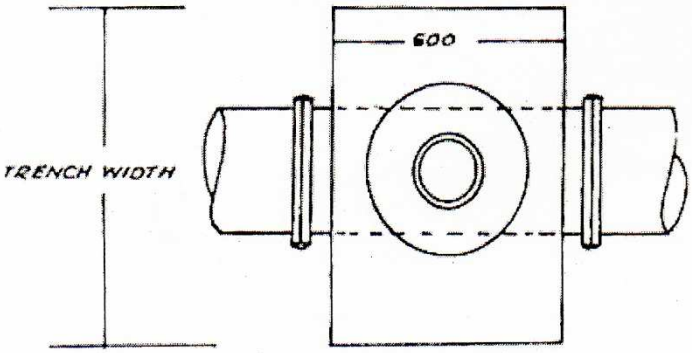

(● NOT TO SCALE)

PLAN A-A

TYPE DESIGN FOR FIXING OF AIR VALVE ON SHAFT

MAHARASHTRA JEEVAN PRADHIKARAN

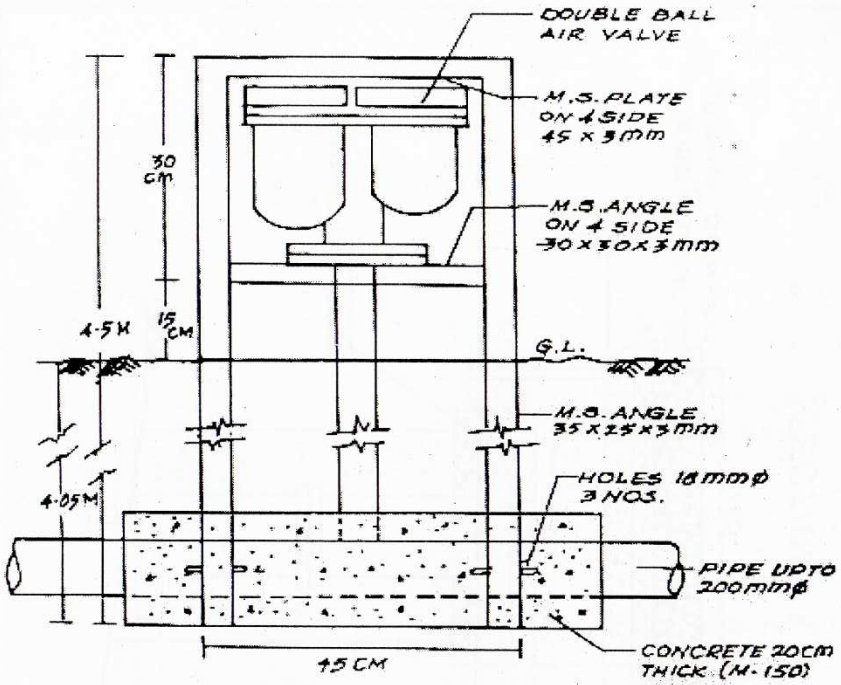

SECTION

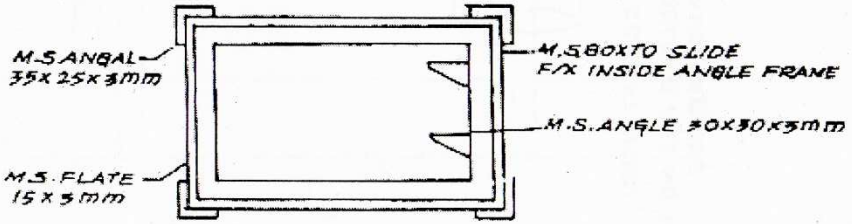

PLAN

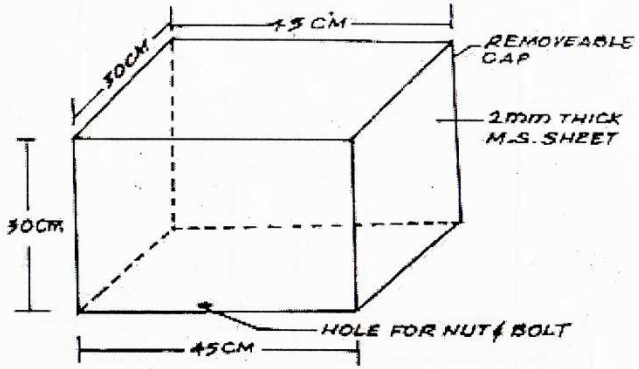

ELEVATION

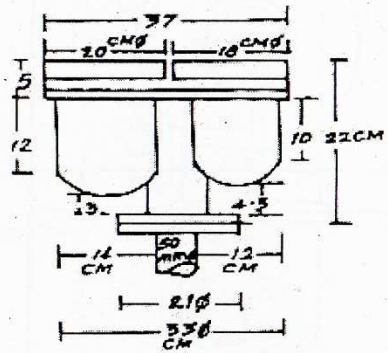

DETAILS OF DOUBLE BALL AIR VALVE

NOT TO SCALE

DETAILS OF CAGE FOR DOUBLE BALL AIR VALVE 50mmØ & BELOW 50mmØ

MAHARASHTRA JEEVAN PRADHIKARAN

TYPE DESIGN FOR RAFT FOUNDATON OF AIR-VALVE SHAFT (FOR ALL DIAMETERS OF PIPELINE)

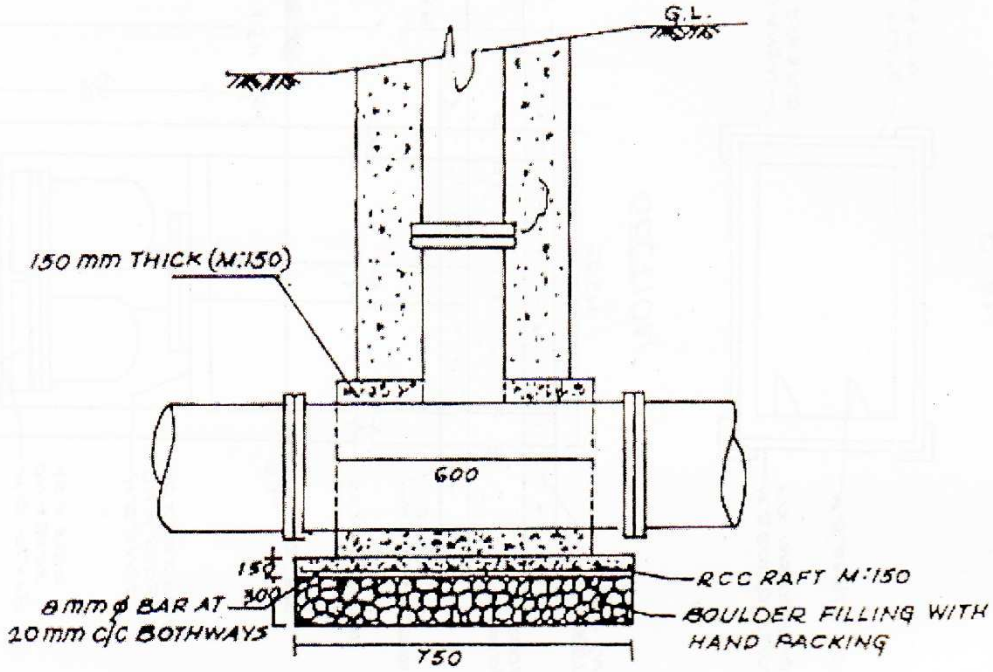

SECTION - A A

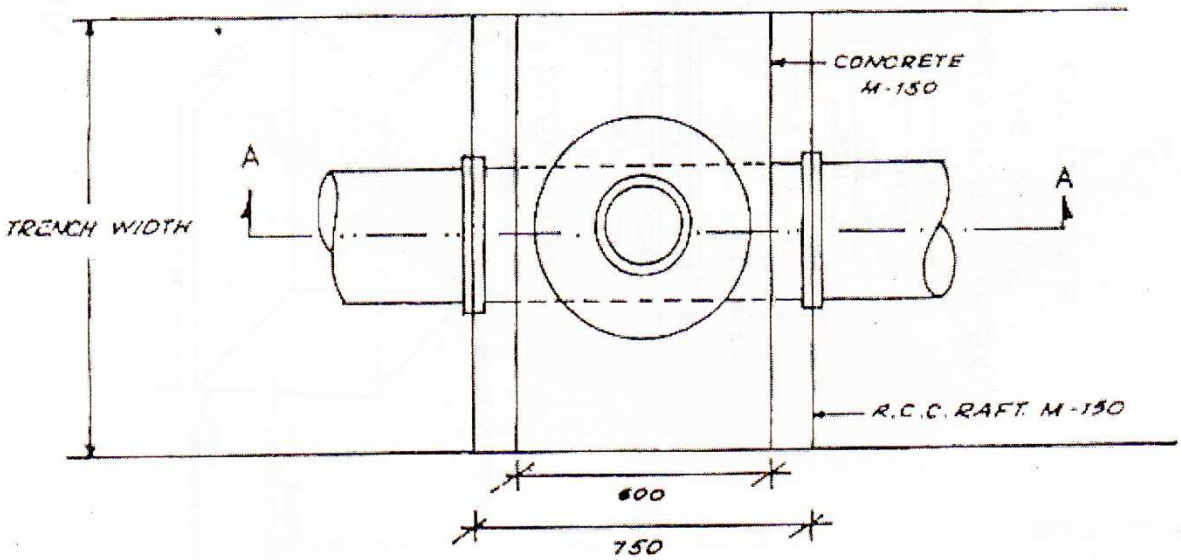

PLAN

(● NOT TO SCALE)

MAHARASHTRA JEEVAN PRADHIKARAN

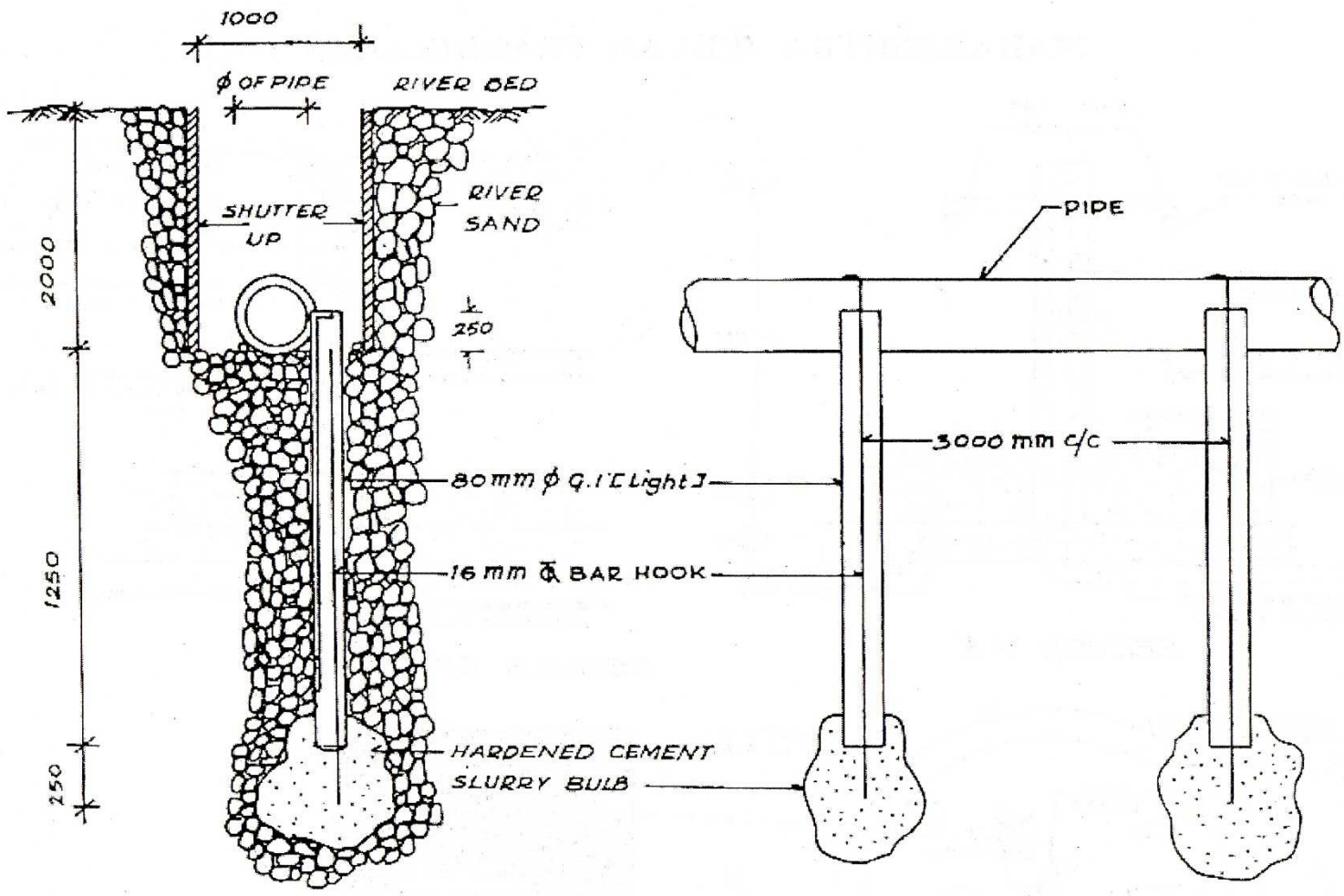

MAKING AN ANCHORAGE ARRANGEMENT

• ALL DIAMENSION ARE IN MM OTHERWISH SPECIFIED
(• NOT TO SCALE)

MAHARASHTRA JEEVAN PRADHIKARAN

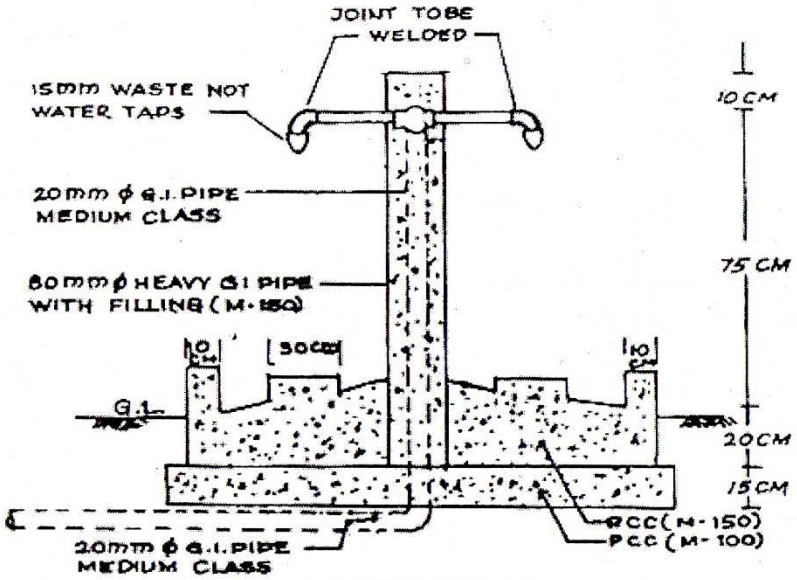

SECTION 'AB'

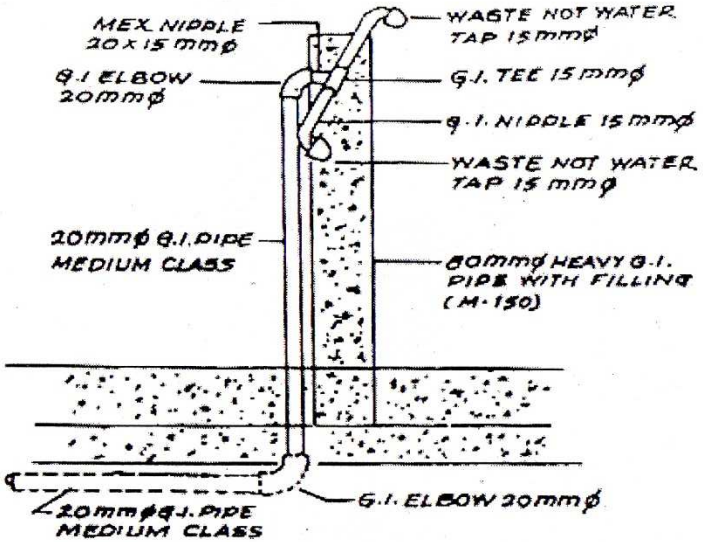

DETAILS OF FITTING

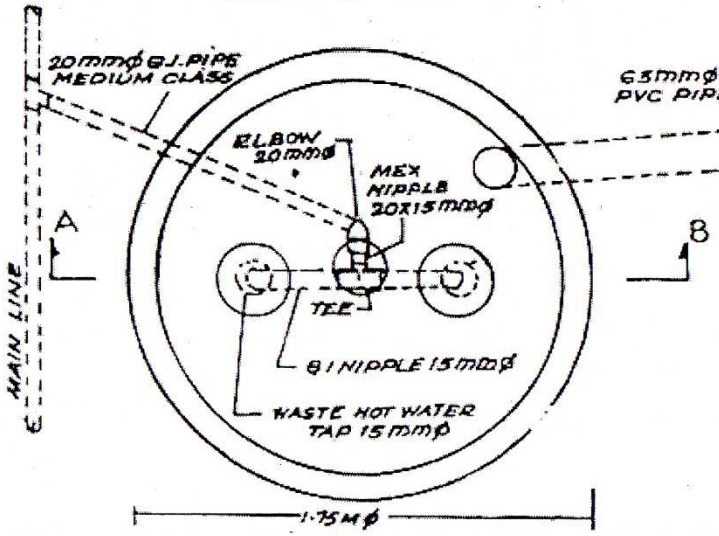

PLAN
(● NOT TO SCALE)

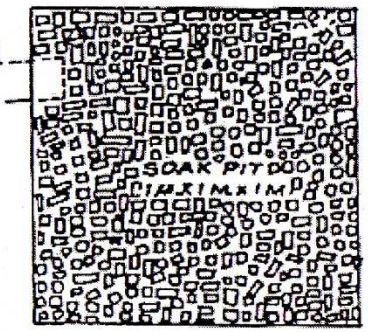

NOTE:- FOR BAD FOUNDATION PROVIDE BOULDER FILLING 30 CM THICK BELOW PCC (M-100)

TYPE DESIGN OF CIRCULAR STAND POST

MAHARASHTRA JEEVAN PRADHIKARAN

TYPE DRAWING OF R.C.C. CATTLE TROUGH

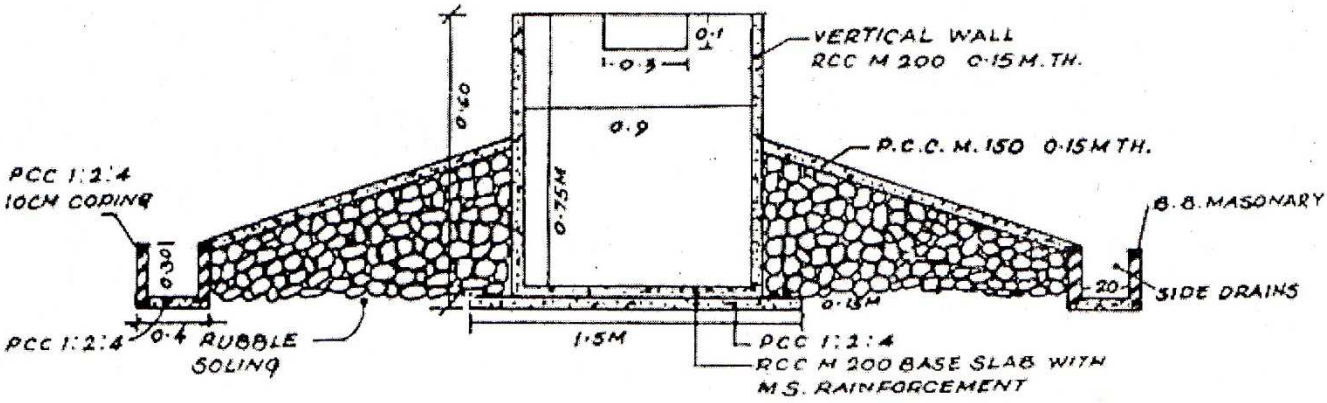

SECTION A-A

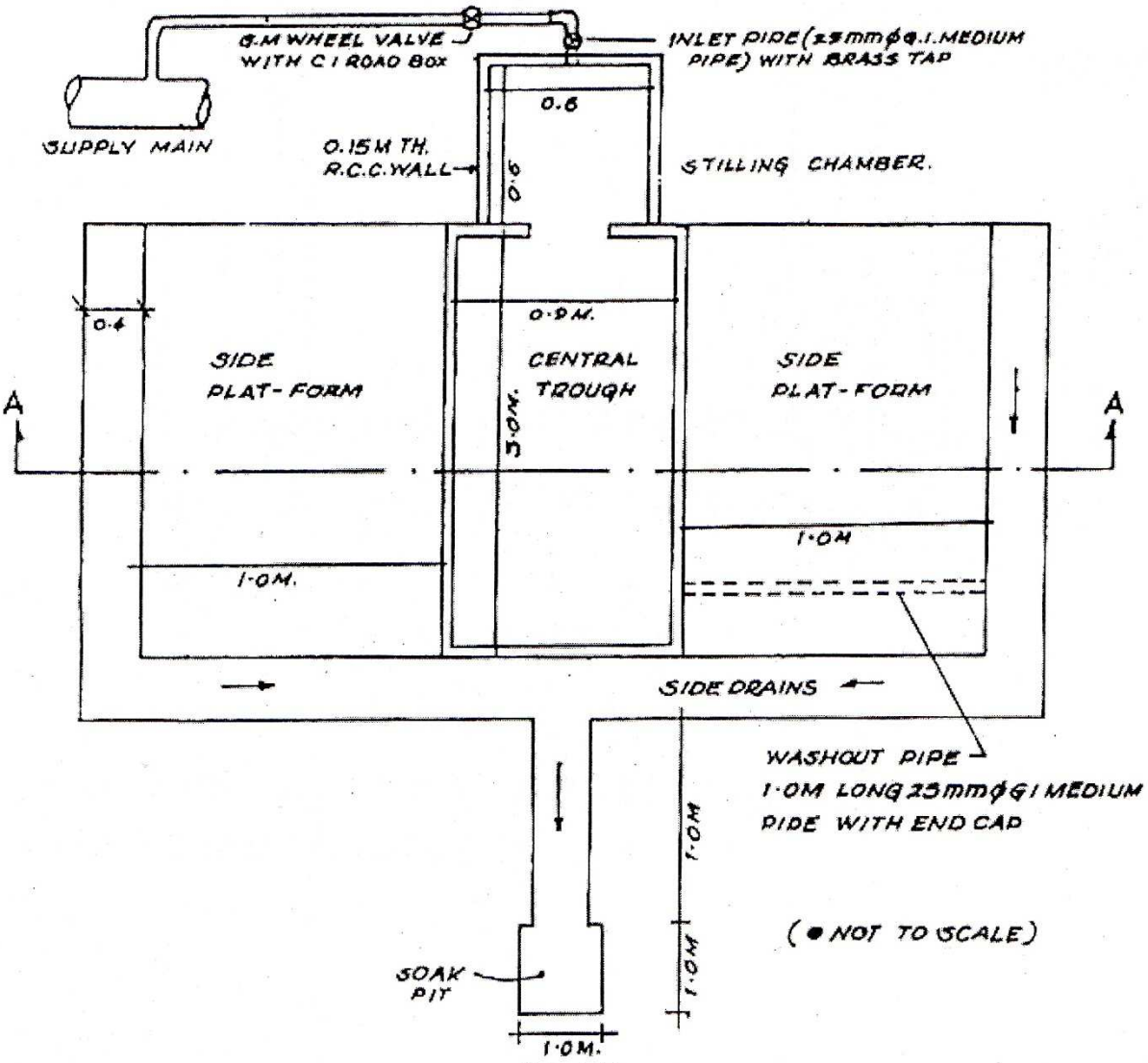

PLAN

MAHARASHTRA JEEVAN PRADHIKARAN

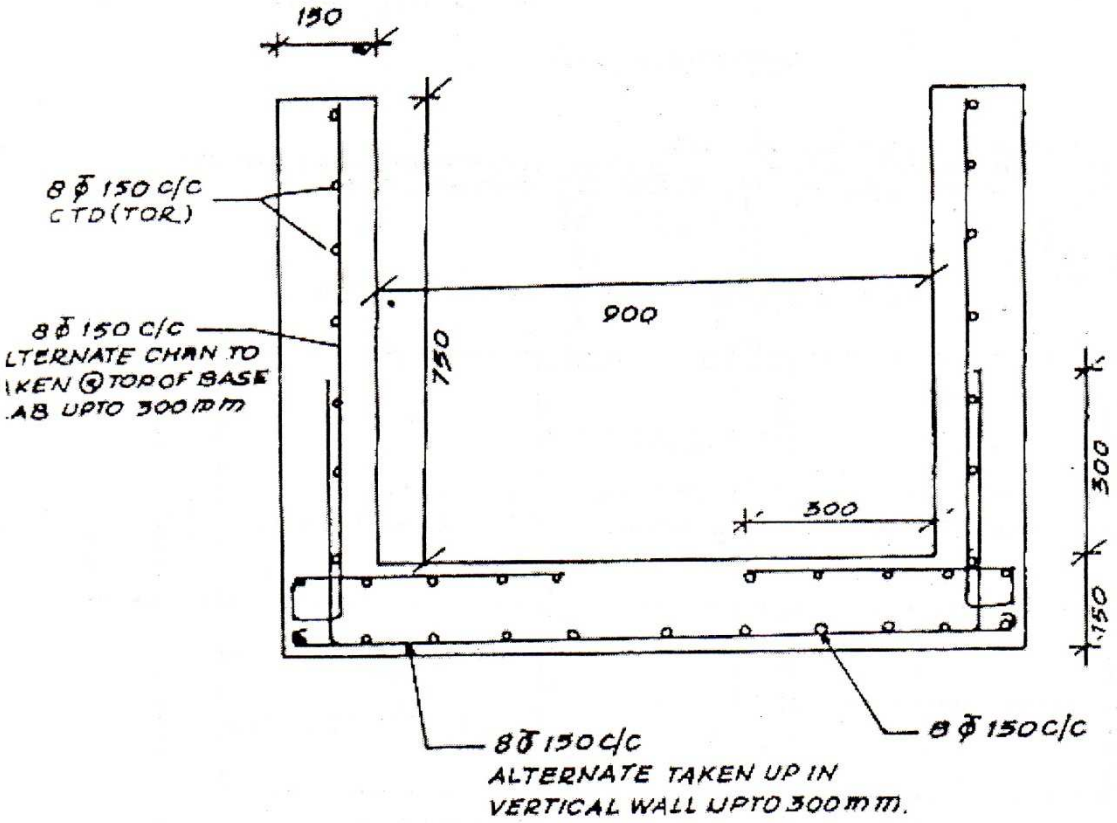

REINFORCEMENT DETAILS OF CATTLE TROUGH

NOTE : REINFORCEMENT SHALL BE OF CTD(TOR STEEL)

MAHARASHTRA JEEVAN PRADHIKARAN

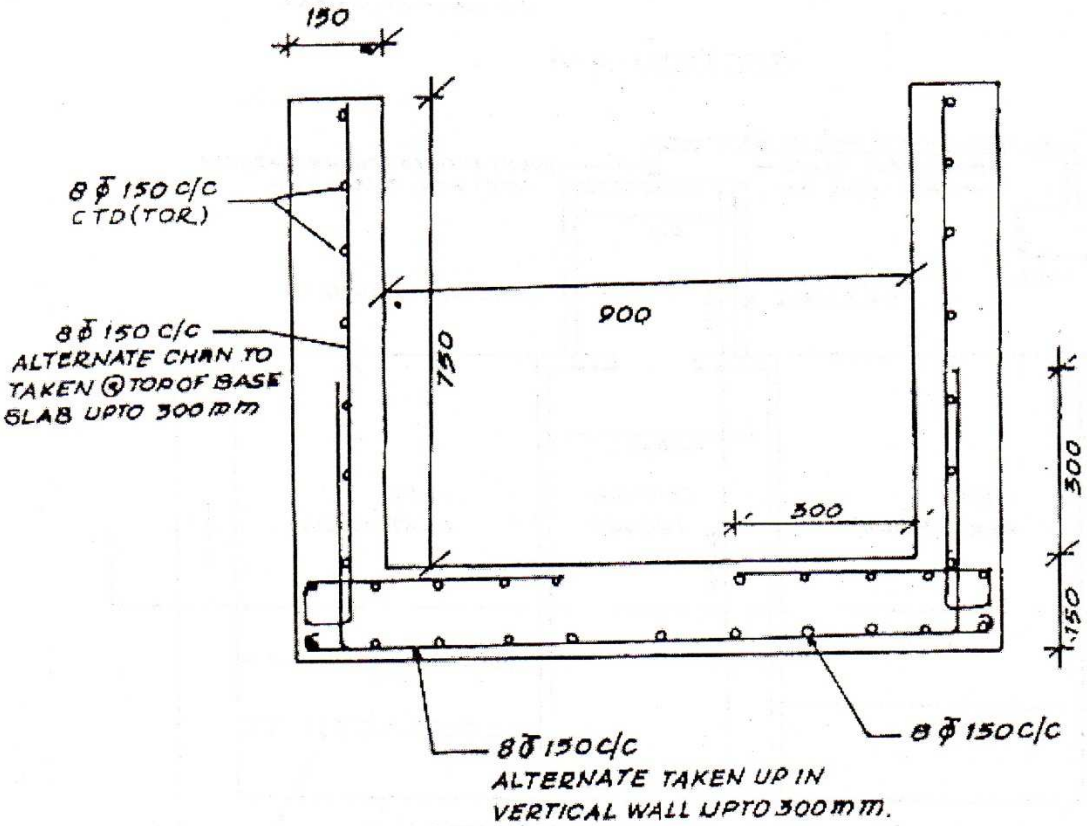

REINFORCEMENT DETAILS OF CATTLE TROUGH

NOTE : REINFORCEMENT SHALL BE OF CTD(TOR STEEL)

MAHARASHTRA JEEVAN PRADHIKARAN

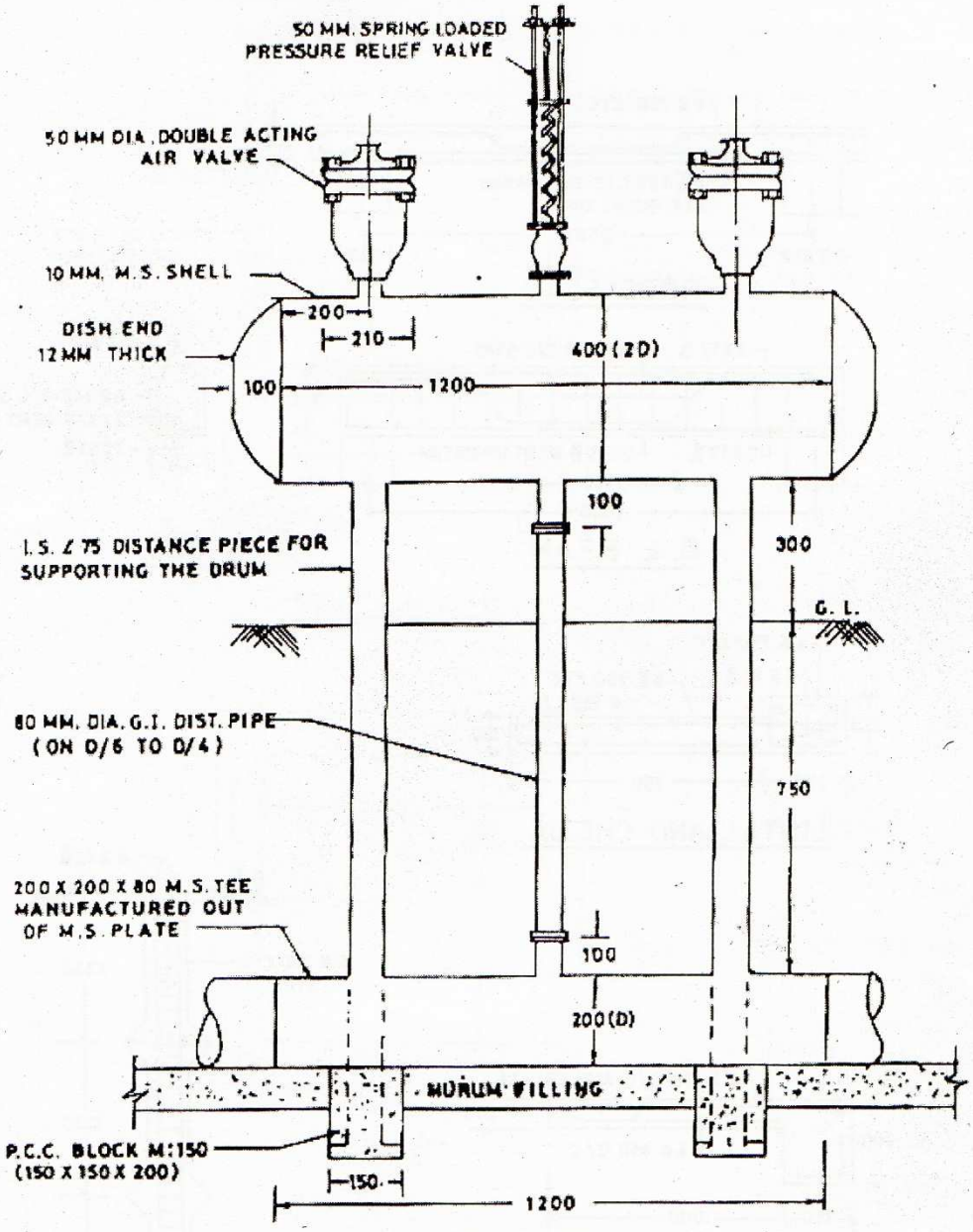

SECTION

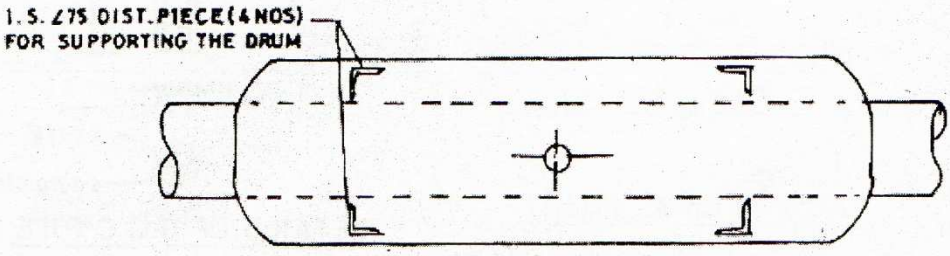

PLAN

TYPE DESIGN OF DRUM TYPE AIR VALVE

MAHARASHTRA JEEVAN PRADHIKARAN

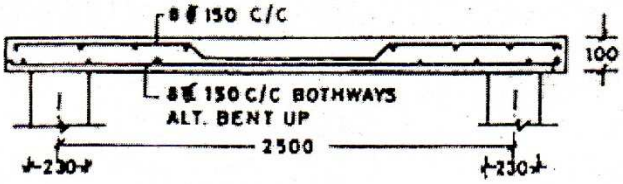

ROOF SLAB

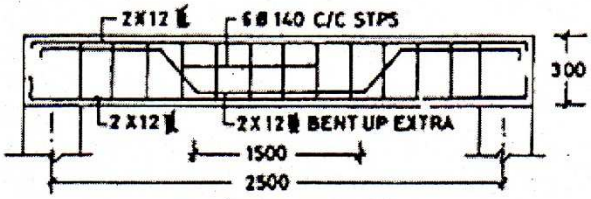

G. L. BEAM

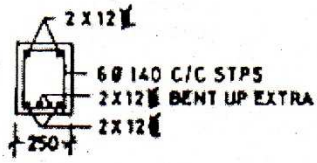

SEC.

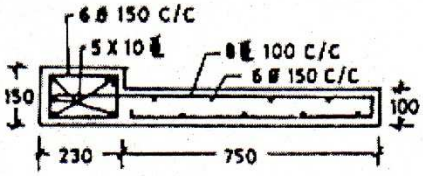

LINTAL AND CHEJJA

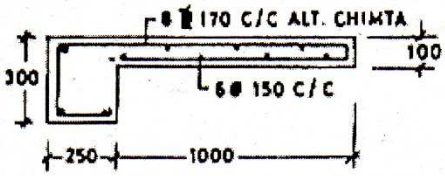

LANDING

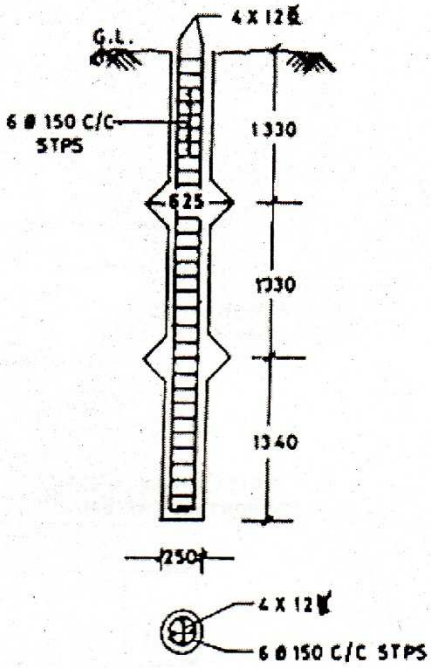

DETAILS OF R.C.C. PILE

DETAILS OF REINFORCEMENT OF VARIOUS MEMBERS OF SWITCH HOUSE WHERE B.C. SOIL IS AVAILABLE AND G. L. IS ABOVE H. F. L.

MAHARASHTRA JEEVAN PRADHIKARAN

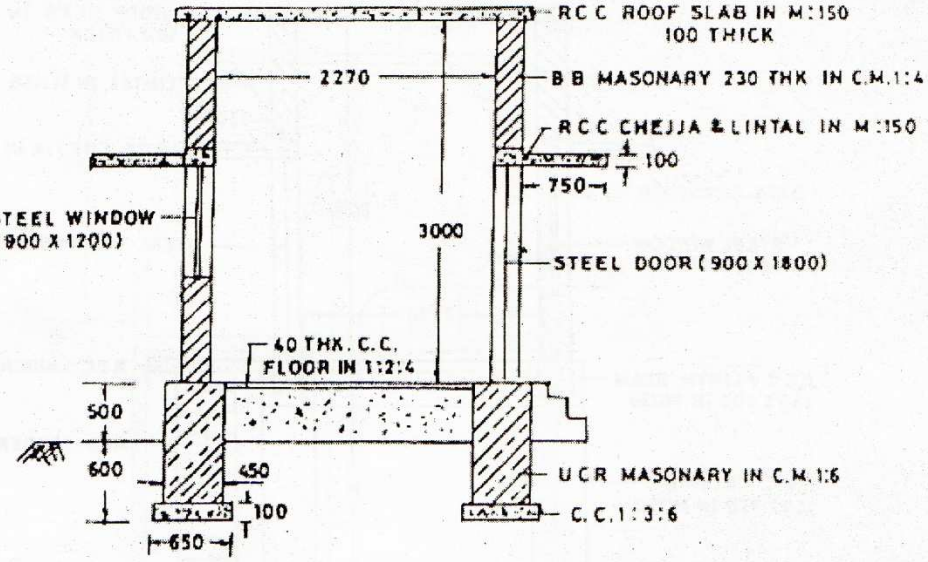

SECTION A-B

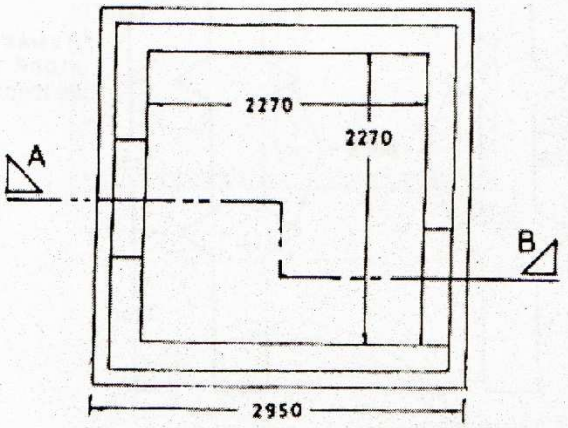

PLAN

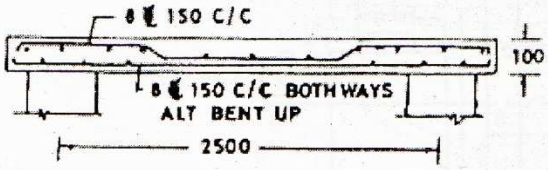

ROOF SLAB

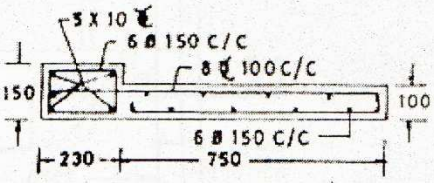

LINTEL AND CHEJJA

TYPE DESIGN OF SWITCH HOUSE WHEN GOOD FOUNDATION IS AVAILABLE AND G.L. IS ABOVE H.F.L.

MAHARASHTRA JEEVAN PRADHIKARAN

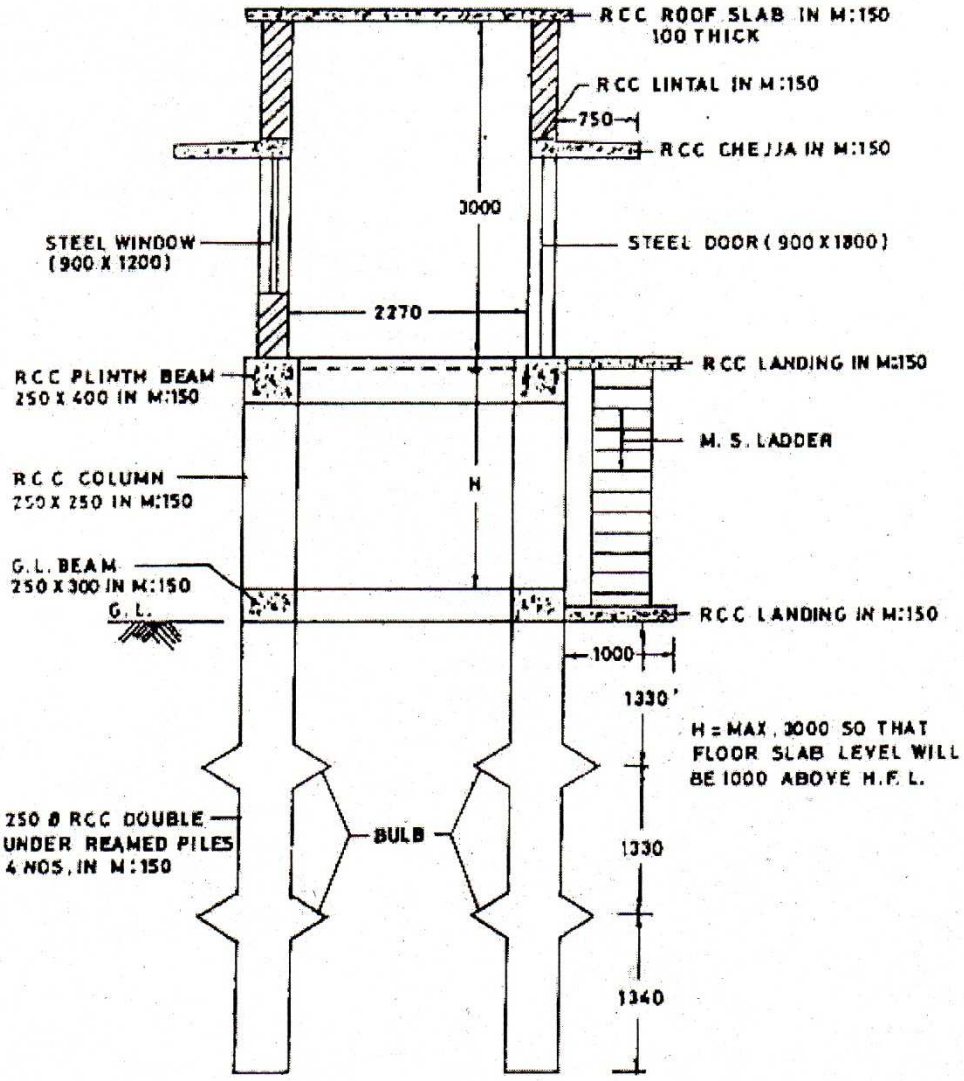

SECTION A-B

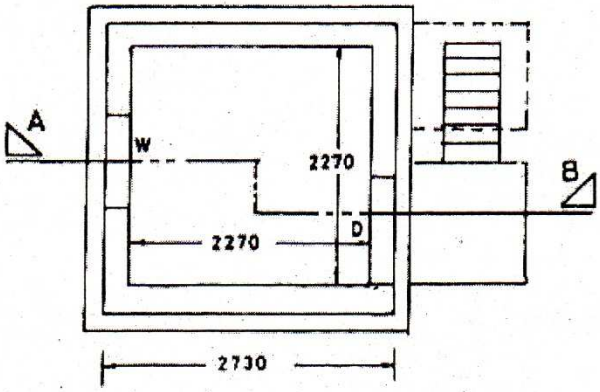

PLAN

TYPE DESIGN OF SWITCH HOUSE WHEN B.C. SOIL IS AVAILABLE AND G.L. IS BELOW H.F.L.

MAHARASHTRA JEEVAN PRADHIKARAN

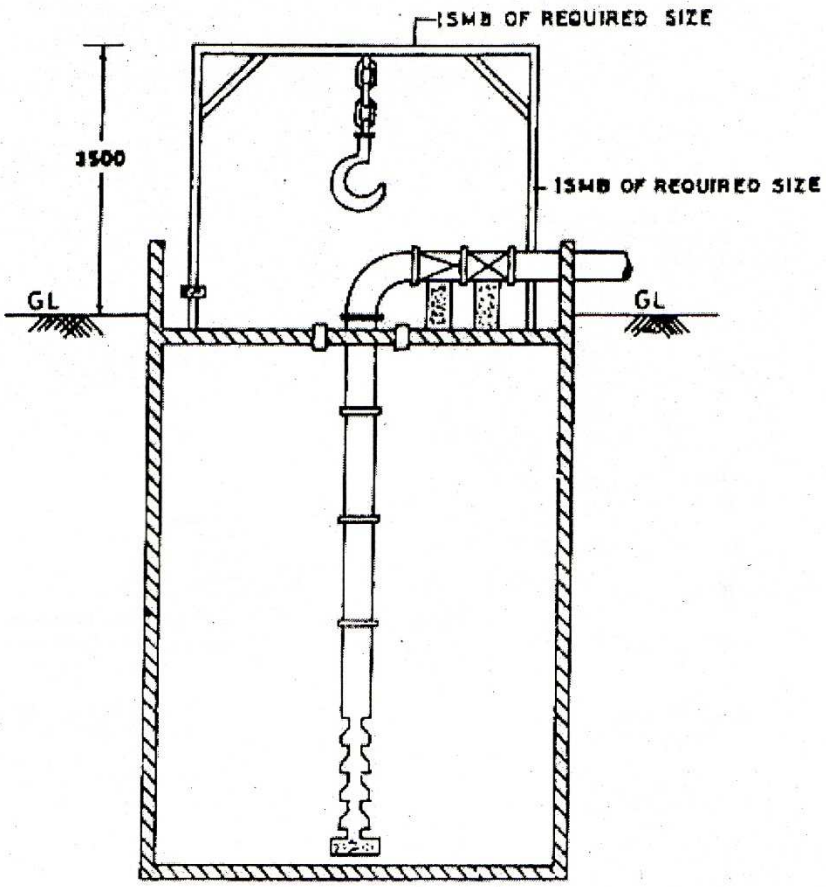

SECTION A-A

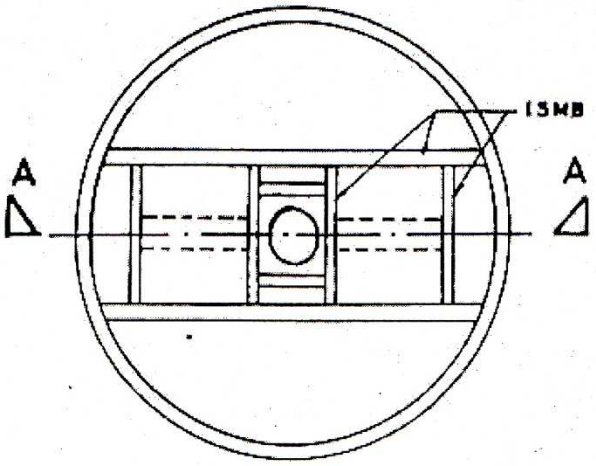

PLAN

TYPE DESIGN OF LIFTING ARRANGEMENT OF SUBMERSIBLE PUMPS ON PERCOLATION WELL

MAHARASHTRA JEEVAN PRADHIKARAN

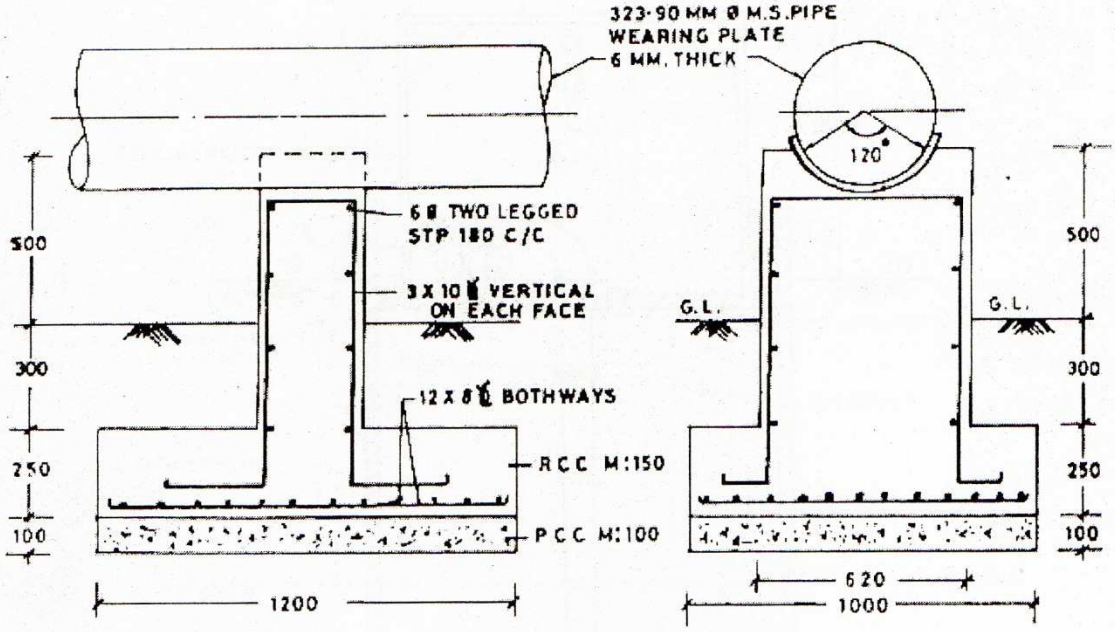

SECTION A-A

SECTION B-B

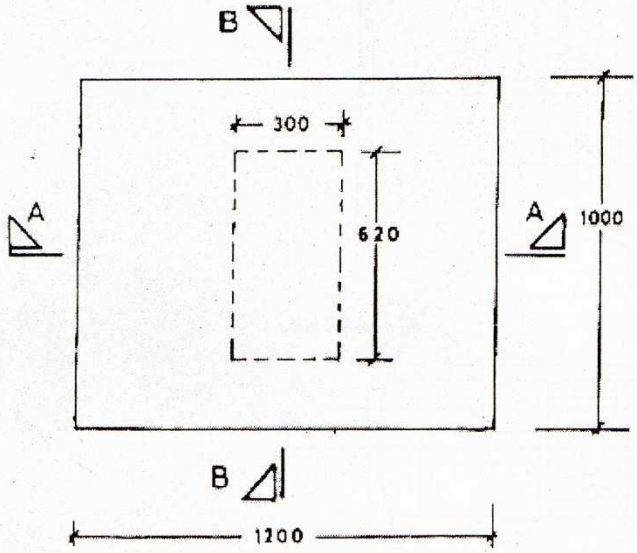

PLAN

NOTE- DESIGN FOR EACH CASE
TO BE APPROVED BY
EX. ENGINEER INCHARGE

TYPE DESIGN OF R.C.C. CHAIR UP TO 355·6 MM. DIA.

MAHARASHTRA JEEVAN PRADHIKARAN

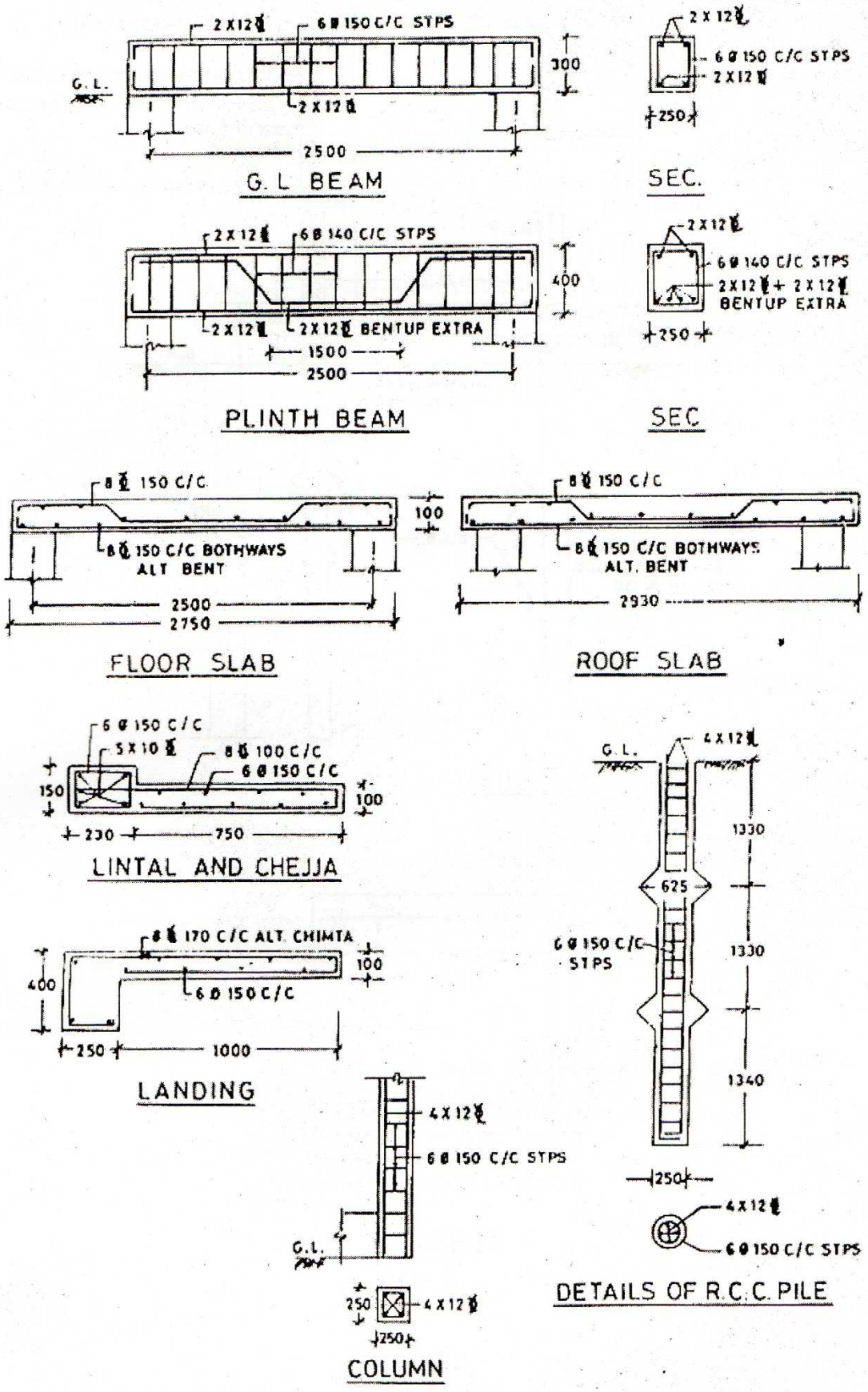

DETAILS OF REINFORCEMENT OF VARIOUS MEMBERS OF SWITCH HOUSE WHERE B.C. SOIL IS AVAILABLE AND G.L. IS BELOW H. F. L.

MAHARASHTRA JEEVAN PRADHIKARAN

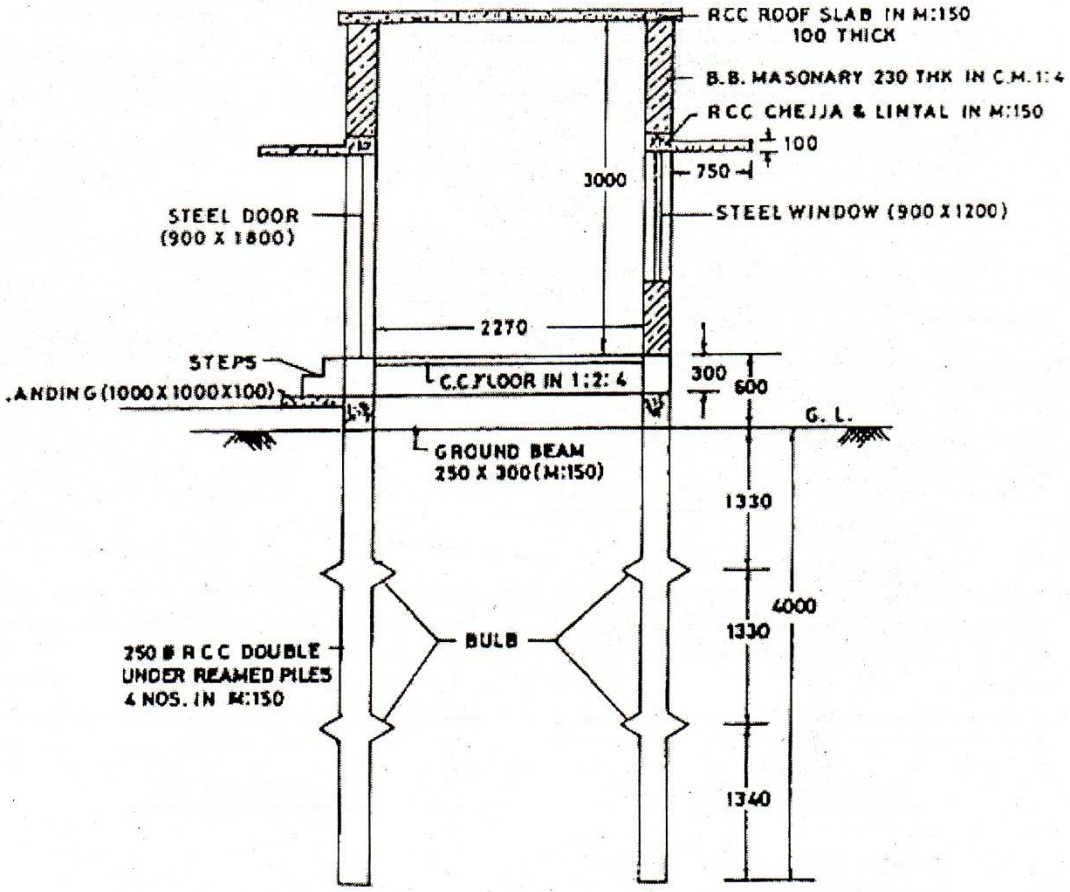

SECTION A-B

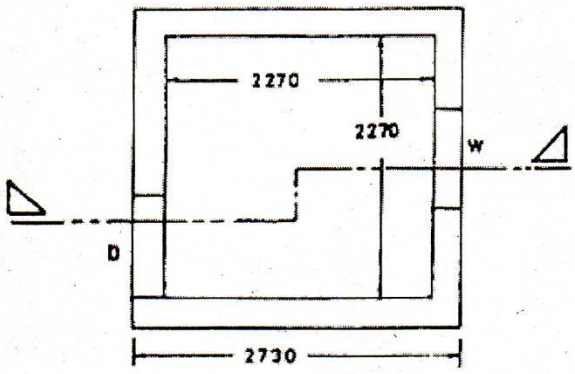

PLAN

TYPE DESIGN OF SWITCH HOUSE WHEN B. C. SOIL IS AVAILABLE AND G. L. IS ABOVE H.F. L.

MAHARASHTRA JEEVAN PRADHIKARAN

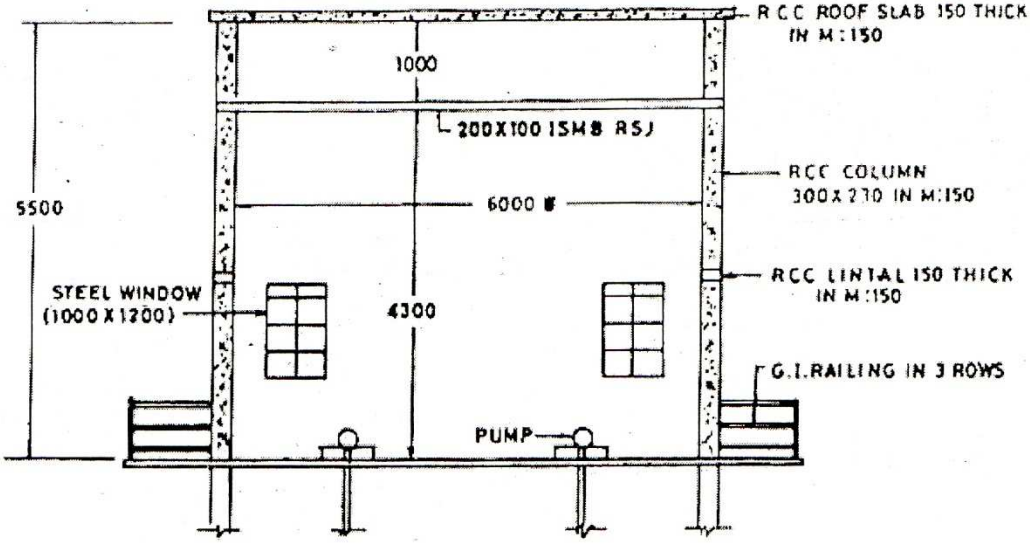

SECTION A-B

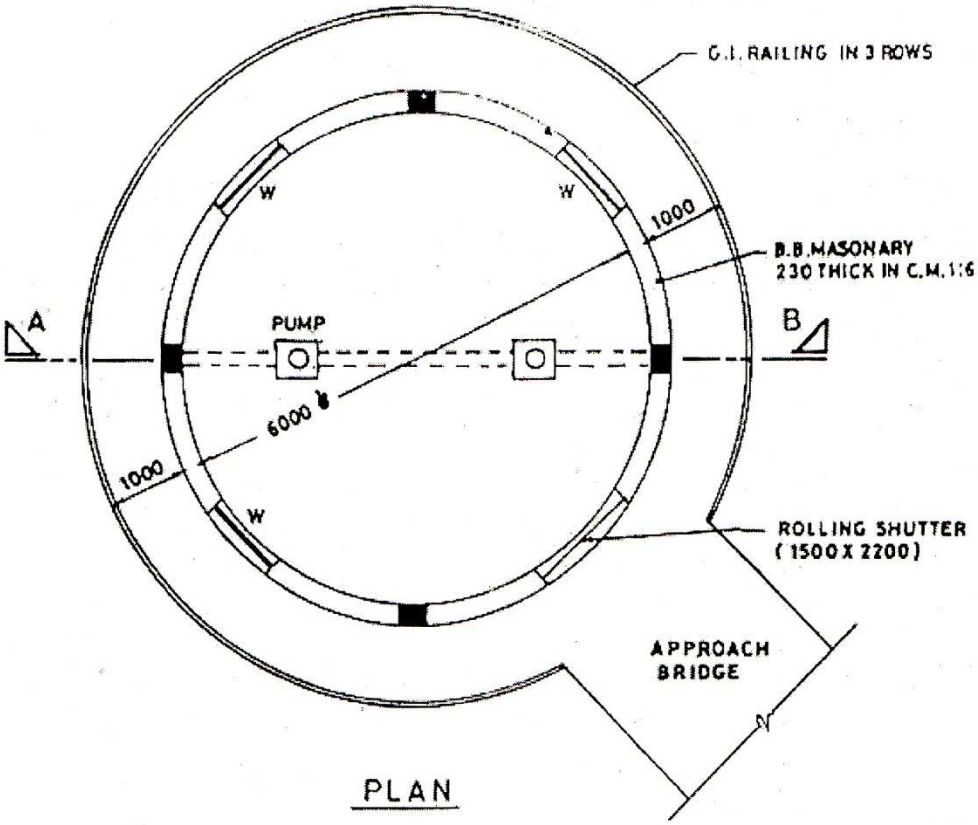

PLAN

TYPE DESIGN OF PUMP HOUSE OVER R.C.C. JACK-WELL

MAHARASHTRA JEEVAN PRADHIKARAN

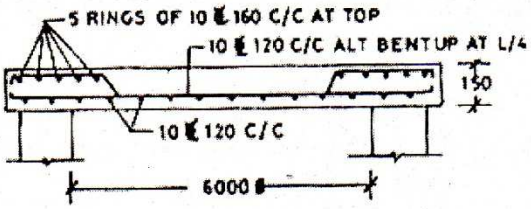

SECTION X-X

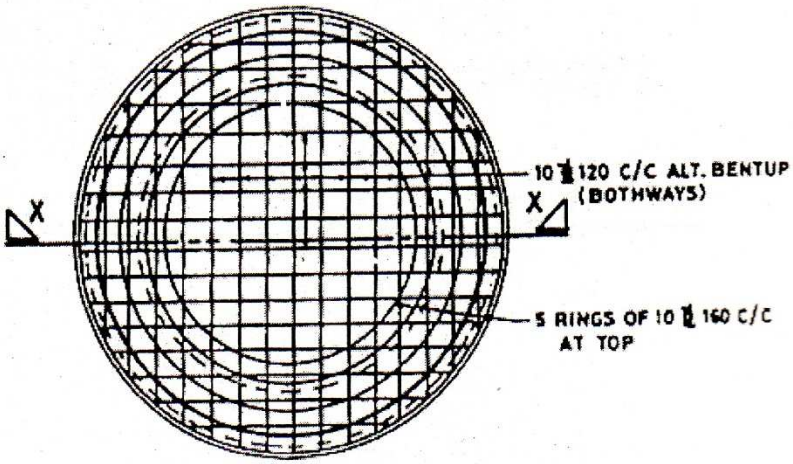

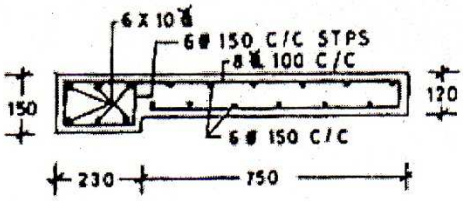

LINTAL AND CHEJJA

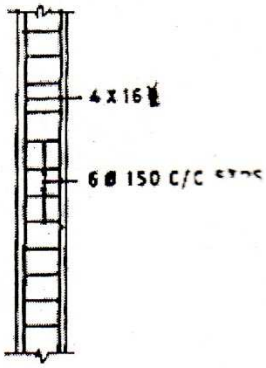

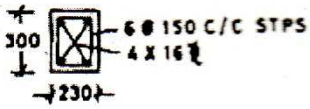

COLUMN

TYPE DESIGN OF REINFORCEMENT OF VARIOUS MEMBERS OF PUMP HOUSE OVER R.C.C. JACK-WELL

MAHARASHTRA JEEVAN PRADHIKARAN

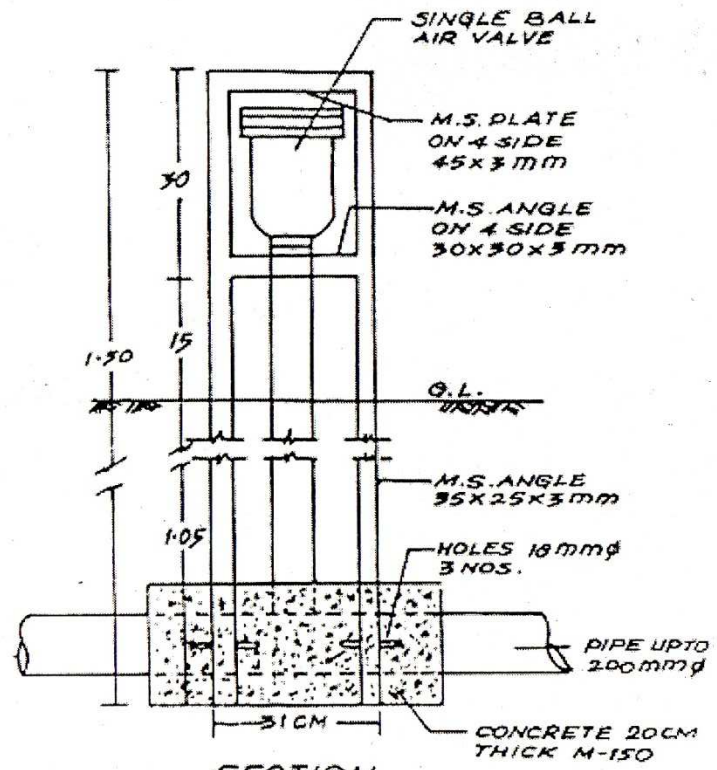

SECTION

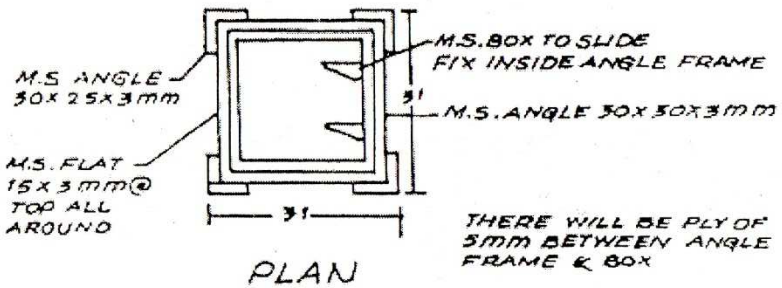

PLAN

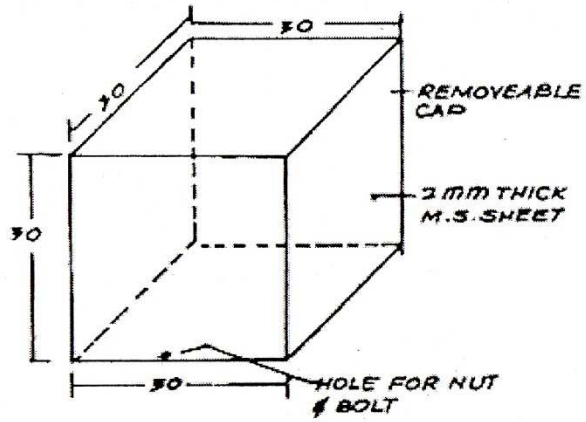

ELEVATION

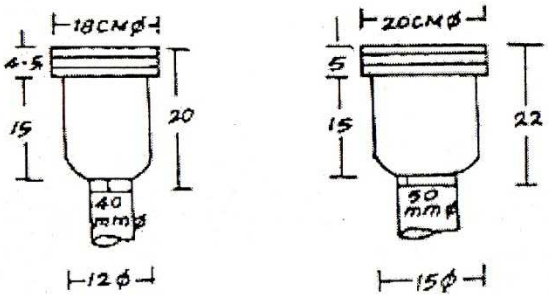

DETAILS OF AIR VALVES

(● NOT TO SCALE)

DETAILS OF CAGE FOR SINGLE BALL AIR VALVES 50mm Ø & BELOW 50mm Ø

MAHARASHTRA JEEVAN PRADHIKARAN

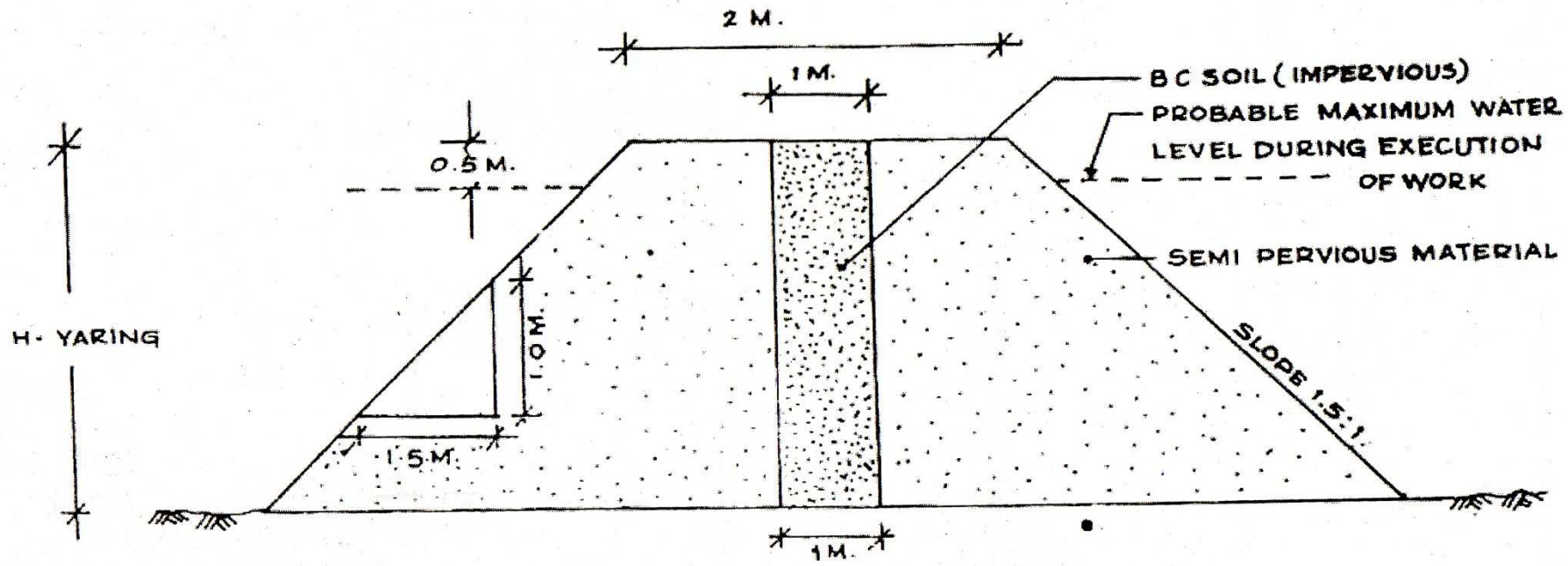

TYPICAL SKETCH OF COFFERDAM

MAHARASHTRA JEEVAN PRADHIKARAN

BAROMETRIC CHLORINATION SYSTEM

1. Chlorine Gas Room
2. Chlorine Gas Cylinder
3. Regulator
4. Brass Union for Gas connection
5. Heavy Quality 1/2"Dia. Reinforced PVC flexible pipe.
6. Heavy Quality1/2" Dia. PVC plumbing pipe for Gas.
7. Overhead PVC Water Tank Cap.Min. 1000 L.
8. 3/4" dia.PVC/GI pipe for inlet for water tank.
9. 3/4" dia. PVC/GI pipe for Overflow for water tank.
10. Heavy quality 1/2"dia. PVC plumbing pipe for water.
11. Heavy quality 1" dia.PVC plumbing pipe for concentrated solution of chlorine gas.
12. Pure water channel.
13. Sump.
14. Heavy quality 1"dia. PVC plumbing pipe for connection to Glass tube.
15. Calibrated glass tube for measuring the chlorine dose.

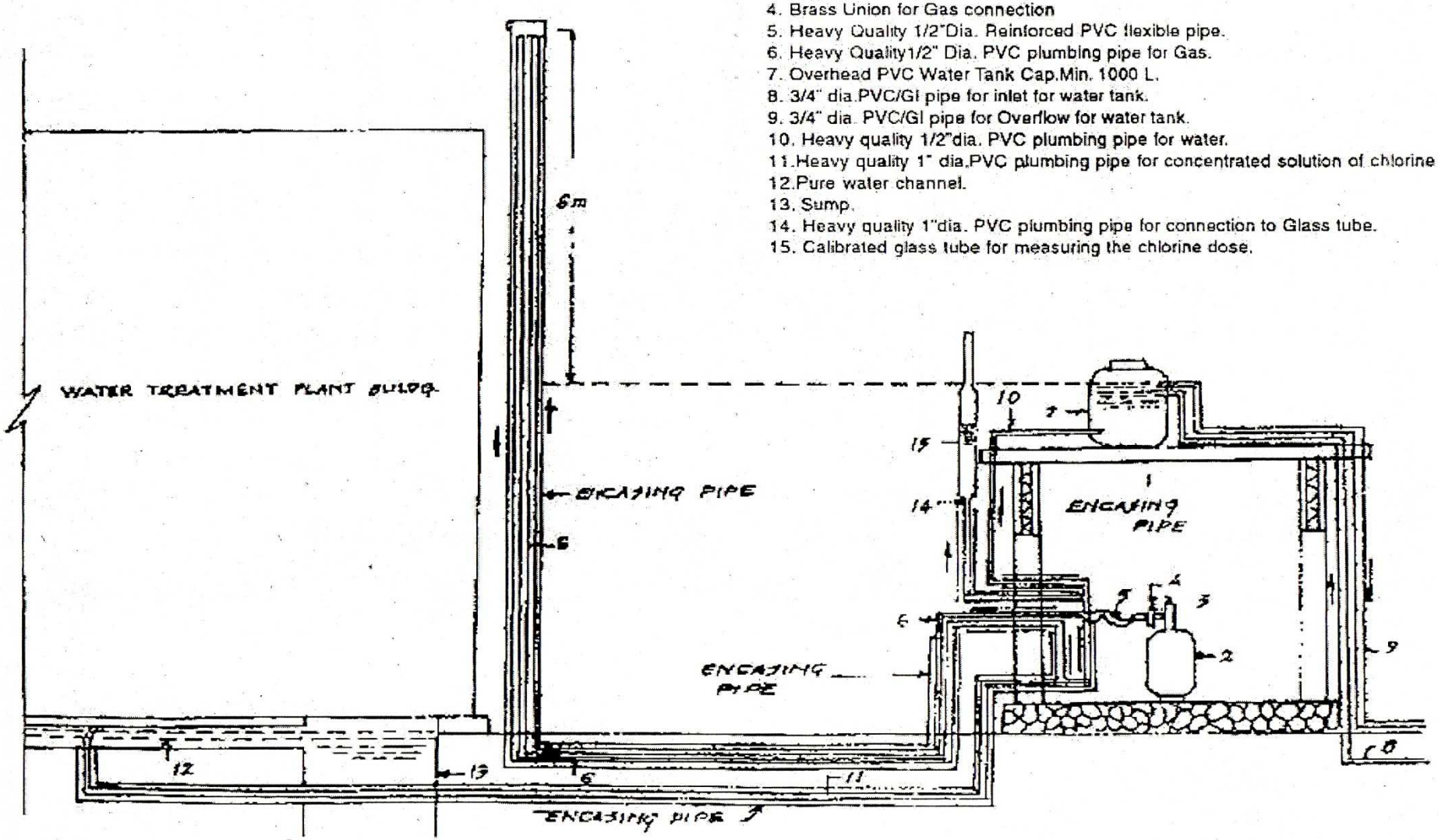

महाराष्ट्र जीवन प्राधिकरण

पाणी वाचवा,
प्रत्येक थेंब मोलाचा

दात घासण्यासाठी लागणारे पाणी

अ) मगाचा वापर केल्यास १/२ लिटर
ब) बेसिनमधील नळाचा वापर केल्यास ४५ लिटर्स

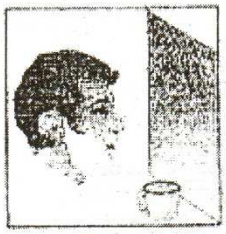
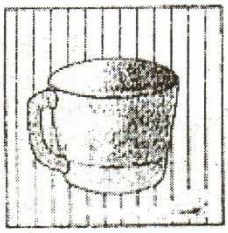

दाढी करण्यासाठी लागणारे पाणी

अ) मगाचा वापर केल्यास २ लिटर
ब) बेसिनमधील नळाचा वापर केल्यास १०६ लिटर्स

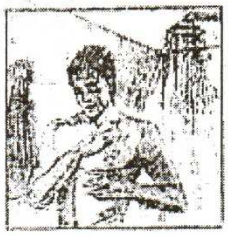

स्नान करण्यासाठी लागणारे पाणी

अ) बादली वापरल्यास २० लिटर्स ब) शॉवर वापरल्यास ८० लि.
क) टब वापरल्यास ११० लिटर्स ड) अंगाला साबण लावताना शॉवर बंद केला तरी ६० लिटर्स पाणी वाचू शकते

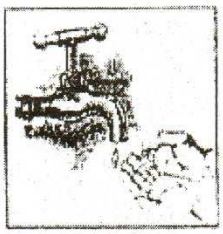
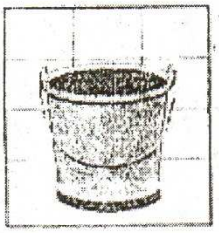

हात धुण्यासाठी लागणारे पाणी

अ) मगाचा वापर केल्यास २ लिटर
ब) बेसिनमधील नळाचा वापर केल्यास १८ लिटर्स

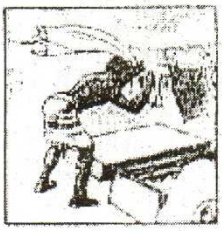
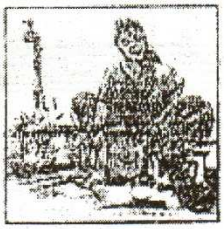

कपडे धुण्यासाठी लागणारे पाणी

अ) बादलीचा वापर केल्यास ४० लिटर्स
ब) वॉशिंग मशिन वापरल्यास २६० लिटर्स
क) वाहता नळ वापरल्यास २४० लिटर्स

नळ गळती मुळे वाया जाणारे पाणी

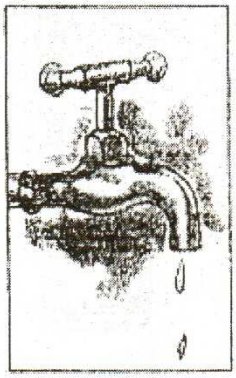
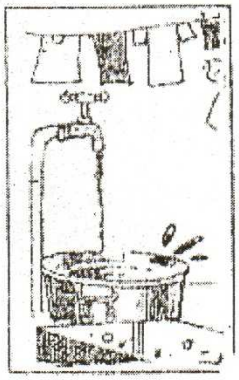

नळाच्या तोटीतून होणारी गळती	कालावधी	वाया जाणारे पाणी लिटर्समध्ये
एक थेंब प्रतिसेकंद	एक दिवस	५.२ लिटर्स
	एक आठवडा	३६.४ लिटर्स
	एक वर्ष	१८९१.० लिटर्स
थेंब थेंब पडणारी सततची धार	एक दिवस	१०९.१ लिटर्स
	एक आठवडा	७५४.६ लिटर्स
	एक वर्ष	३९७१२.० लिटर्स

आता तुम्हीच ठरवा, पाण्याचा वापर कसा करायचा